Public

| | |
|---|---|
| REV | 08 |
| Date | 10/2026 |
| Supersedes | D–EIMAC02005-23_07EN |

**Installation, Operation and Maintenance Manual**
**D-EIMAC02005-23_08EN**

# Air cooled chiller with inverter driven screw compressor

# EWAH~MZ~D
# EWAD~MZ~D

**Original Instructions**

# CONTENTS


**1 INTRODUCTION ..... 9**
1.1 Precautions against residual risks ..... 9
1.2 Description ..... 10
1.3 Information about R1234ze(E) refrigerant ..... 10
1.4 Information about installation ..... 11
1.5 Transport limits ..... 13
**2 RECEIVING THE UNIT ..... 14**
**3 OPERATING LIMITS ..... 15**
3.1 Storage ..... 15
3.2 Operation ..... 15
3.3 Corrective factors ..... 18
**4 MECHANICAL INSTALLATION ..... 19**
4.1 Safety ..... 19
4.1.1 Safety devices ..... 20
4.2 Handling and lifting instructions ..... 20
4.2.1 Safety hook ..... 23
4.2.2 Lifting shackles ..... 24
4.2.3 OPT 71 Kit container ..... 24
4.3 Positioning and assembly ..... 25
4.4 Noise and sound protection ..... 26
4.4.1 Spring vibration dampers ..... 26
4.4.2 Fix the damper with the screw ..... 27
4.4.3 Adjustment ..... 27
4.5 Minumum space requirements ..... 28
4.6 Water circuit for unit connection ..... 31
4.6.1 Water piping ..... 31
4.6.3 Flow switch option installation ..... 31
4.6.2 Heat recovery option ..... 32
4.7 Water treatment ..... 32
4.8 Evaporator and heat recovery exchangers anti-freeze protection ..... 33
**5 ELECTRICAL INSTALLATION ..... 34**
5.1 General specifications ..... 34
5.2 Electrical supply ..... 34
5.3 Electric connections ..... 34
5.4 Cable requirements ..... 35
5.5 Phase unbalance ..... 35
5.6 LHS panel specifications ..... 36
5.6.1 Product Identification ..... 36
5.6.2 Directives and Standards ..... 37
5.6.3 Panel Terminals ..... 37
5.6.4 Piping Connections ..... 37
5.7 Maintenance ..... 38
5.7.1 Ordinary Maintenance ..... 39
5.7.2 Extraordinary Maintenance ..... 39
5.8 VFD LHS communication ..... 39
5.8.1 Modbus RTU Configuration ..... 39
**6 OPERATOR'S RESPONSIBILITIES ..... 40**
**7 MAINTENANCE ..... 41**
7.1 Routine maintenance ..... 42
7.2 Unit Maintenance and cleaning ..... 45
7.2.1 Microchannel Coil maintenance ..... 45
7.2.2 Fins and tubes coil maintenance ..... 46
7.3 Inverter Capacitors ..... 46
**8 SERVICE AND LIMITED WARRANTY ..... 48**
**9 FIRST START-UP CHECKS ..... 49**
**10 IMPORTANT INFORMATION ABOUT THE REFRIGERANT USED ..... 50**
10.1 Factory and Field charged units instructions ..... 50
**11 DISMISSION AND DISPOSAL ..... 51**
**12 DURATION ..... 52**

**LIST OF FIGURES**

*Fig. 1 - Refrigerant circuit diagram (P&ID) – MONO circuit units* ..... 4
*Fig. 2- Refrigerant circuit diagram (P&ID) – DUAL circuit units* ..... 6
*Fig. 3- Description of the labels applied to the electrical panel* ..... 8
*Fig. 4– EWAH-MZD Silver and Gold unit envelope* ..... 16
*Fig. 5– EWAH-MZD Platinum and Platinum Plus unit envelope* ..... 16
*Fig. 6– EWAD-MZD Silver and Gold unit envelope* ..... 17
*Fig. 7– EWAD-MZD Platinum and Platinum Plus unit envelope* ..... 17
*Fig. 8- Indirect vented closed system* ..... 19
*Fig. 9– Lifting instructions* ..... 22
*Fig. 10– Safety Hook attachment* ..... 23
*Fig. 11Lifting shackles attachment* ..... 24
*Fig. 12– Unit levelling* ..... 25
*Fig. 13– Mounting anti-vibration elements (supplied as optional)* ..... 26
*Fig. 14- Minimum clearance requirements* ..... 29
*Fig. 15– Multiple Chiller Installation* ..... 30
*Fig. 16– VFD LHS Identification Label* ..... 36
*Fig. 17 - Electrical Panel identification Label* ..... 36
*Fig. 18– Refrigerant charge label* ..... 50

**LIST OF TABLES**

*Table 1 – Legend refrigerant circuit diagram (P&ID) – MONO circuit units* ..... 5
*Table 2 – Legend refrigerant circuit diagram (P&ID) – DUAL circuit units* ..... 7
*Table 3– Units PS and TS* ..... 8
*Table 4- Label Identification* ..... 8
*Table 5- Physical characteristics of refrigerant R1234ze(E)* ..... 10
*Table 6– R1234ze(E) ignition and max temperatures* ..... 11
*Table 7 – R1234ze(E) LFL value* ..... 12
*Table 8– Units environmental conditions* ..... 15
*Table 9– Altitude correction factor* ..... 18
*Table 10 – Minimum percentage of glycol in case of low ambient temperature* ..... 18
*Table 11 – Acceptable water quality limits* ..... 32
*Table 12 - Table 1 of EN60204-1 Point 5.2* ..... 35
*Table 16– Ordinary Maintenance Frequency* ..... 39
*Table 17– Modbus RTU Configuration* ..... 39
*Table 18 – General maintenance table* ..... 41
*Table 19 – Standard Routine Maintenance Plan* ..... 43
*Table 20 – Routine Maintenance Plan for Critical Application and/or Highly Aggressive Environment* ..... 44
*Table 21. – Inverter sizes* ..... 46
*Table 22 – Checks to be performed before starting the unit* ..... 49

*Fig. 1 - Refrigerant circuit diagram (P&ID) – MONO circuit units*

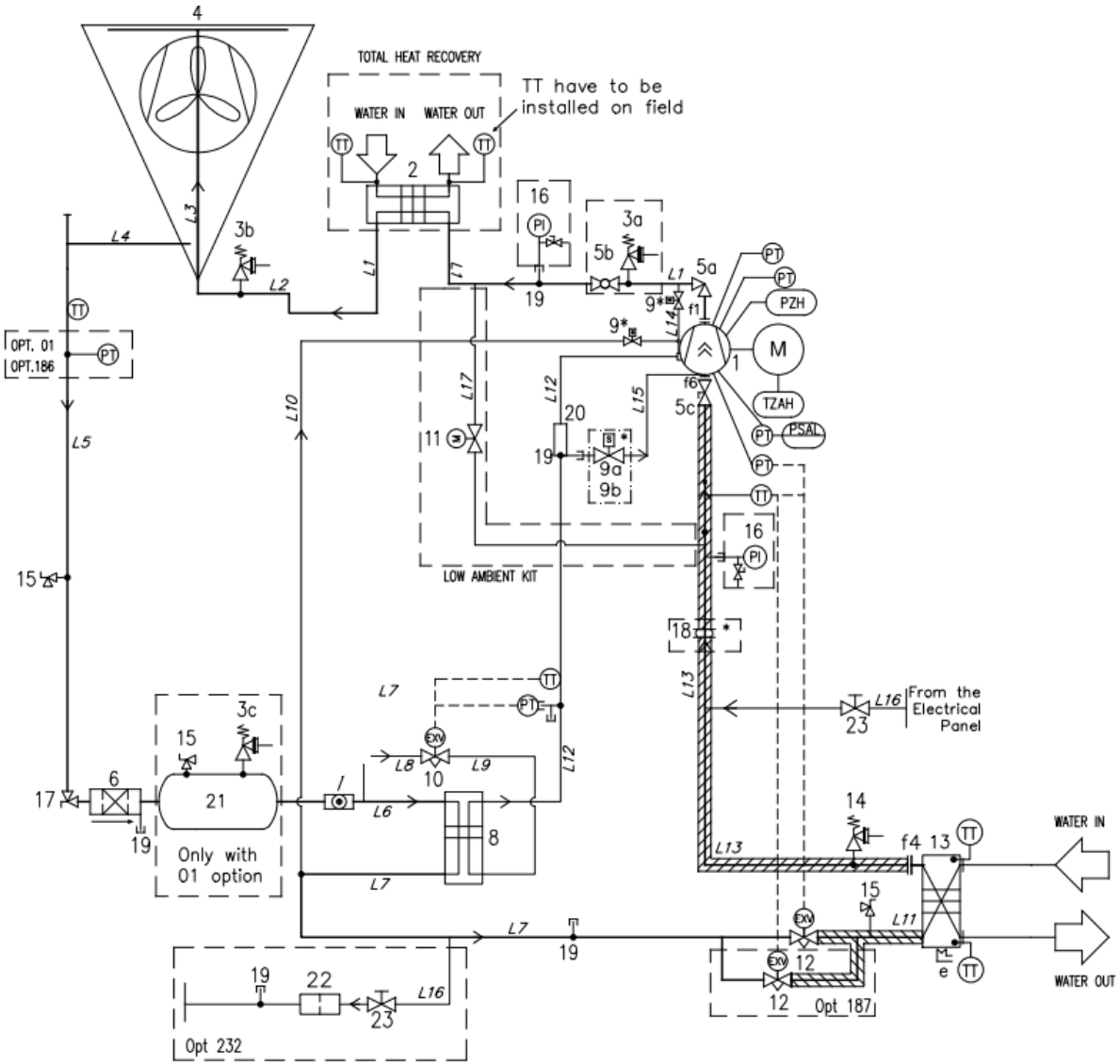

Optional

Safety valves can be provided with a changeover device as optional

***Table 1 – Legend refrigerant circuit diagram (P&ID) – MONO circuit units***

| **LEGEND** | |
|---|---|
| **ID** | **DESCRIPTION** |
| 1 | SCREW COMPRESSOR |
| 2 | HEAT EXCHANGER (BHPE) - HEAT RECOVERY OPTIONAL |
| 3 | PRESSURE RELIEF VALVE Pset = 25,5 bar |
| 4 | MICROCHANNEL CONDENSER COIL |
| 5a | DISCHARGE SHUT OFF ANGLE VALVE |
| 5b | DISCHARGE SHUT OFF BALL VALVE |
| 5c | SUCTION SHUT OFF VALVE |
| 6 | DRIER FILTER |
| 7 | MOISTURE SIGHT GLASS |
| 8 | HEAT EXCHANGER (BPHE) ECONOMIZER |
| 9 | SOLENOID VALVE (inside compressor) |
| 10 | ECONOMIZER ELECTRONIC EXPANSION VALVE |
| 12 | ELECTRONIC EXPANSION VALVE |
| 13 | BPHE EVAPORATOR |
| 14 | PRESSURE RELIEF VALVE Pset = 15,5 bar |
| 15 | ACCESS FITTING |
| 16 | PRESSURE GAUGE (OPTIONAL) |
| 17 | ANGLE VALVE |
| 18 | ANTIVIBRATION JOINT * (only for XR/PR or Opt. 76b) |
| 19 | ACCESS FITTINGS |
| 19b | TEE ACCESS FITTINGS |
| 20 | MUFFLER |
| 21 | LIQUID RECEIVER (only with opt.01 THR) |
| 22 | STRAINER |
| f | FLANGED JOINT |
| e | ELECTRIC HEATER |
| PT | PRESSURE TRANSDUCER |
| PZH | HIGH PRESSURE SWITCH 22.7 bar |
| TZAH | HIGH TEMPERATURE SWITCH (MOTOR THERMISTOR) |
| PSAL | LOW PRESSURE LIMITER (CONTROLLER FUNCTION) |
| TT | TEMPERATURE TRANSDUCER |
| PI | PRESSURE GAUGE |

Water inlet and outlet are indicative. Please refer to the machine dimensional diagrams for exact water connections.
The series is composed by MONO (one circuit) and DUAL (two circuits) units.

*Fig. 2- Refrigerant circuit diagram (P&ID) – DUAL circuit units*

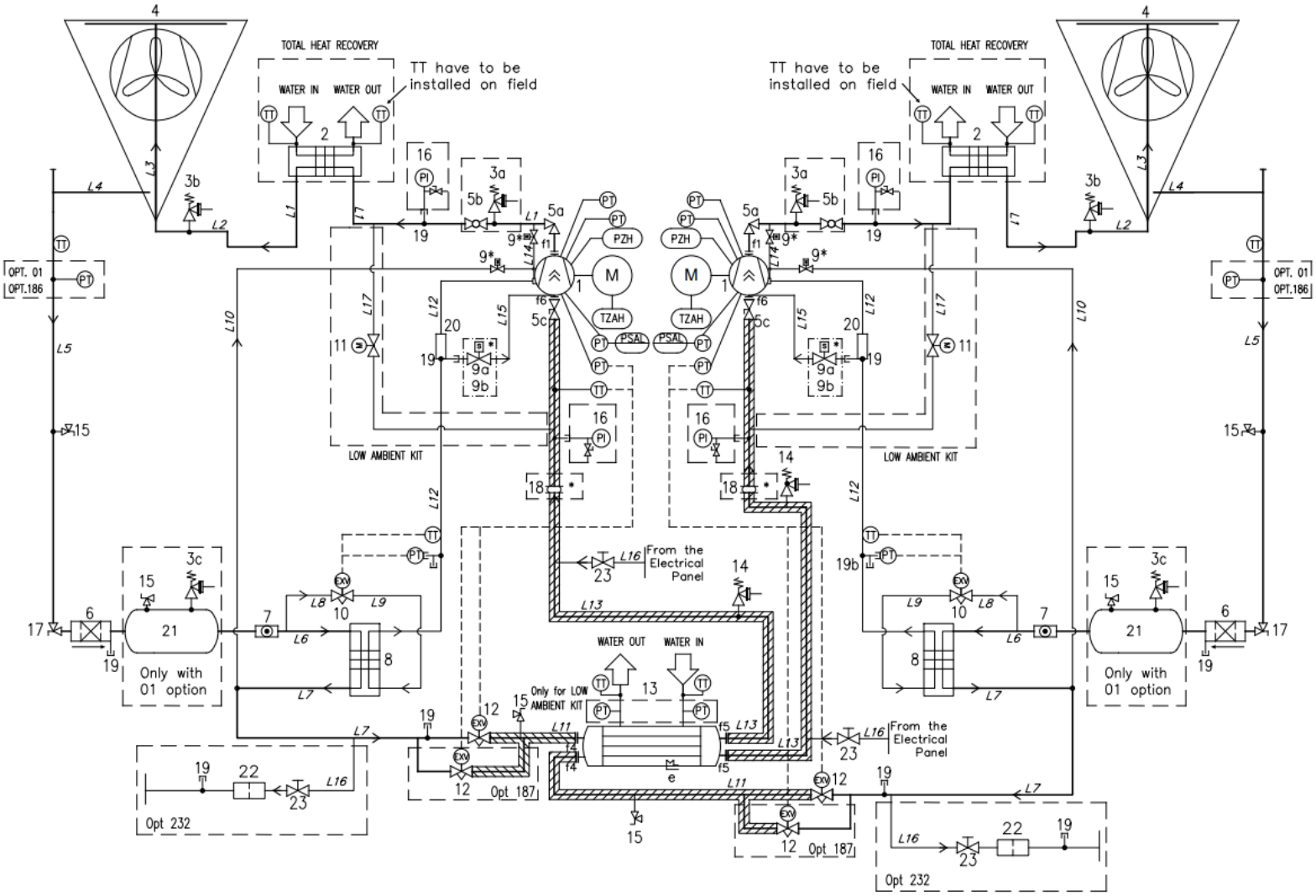

Optional

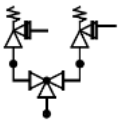

Safety valves can be provided with a changeover device as optional

***Table 2 – Legend refrigerant circuit diagram (P&ID) – DUAL circuit units***

| **LEGEND** | |
|---|---|
| **ID** | **DESCRIPTION** |
| 1 | SCREW COMPRESSOR |
| 2 | HEAT EXCHANGER (BHPE) - HEAT RECOVERY OPTIONAL |
| 3 | PRESSURE RELIEF VALVE Pset = 25,5 bar |
| 4 | MICROCHANNEL CONDENSER COIL |
| 5a | DISCHARGE SHUT OFF ANGLE VALVE |
| 5b | DISCHARGE SHUT OFF BALL VALVE |
| 5c | SUCTION SHUT OFF VALVE |
| 6 | DRIER FILTER |
| 7 | MOISTURE SIGHT GLASS |
| 8 | HEAT EXCHANGER (BPHE) ECONOMIZER |
| 9 | SOLENOID VALVE (inside compressor) |
| 10 | ECONOMIZER ELECTRONIC EXPANSION VALVE |
| 12 | ELECTRONIC EXPANSION VALVE |
| 13 | SHELL&TUBES EVAPORATOR |
| 14 | PRESSURE RELIEF VALVE Pset = 15,5 bar |
| 15 | ACCESS FITTING |
| 16 | PRESSURE GAUGE (OPTIONAL) |
| 17 | ANGLE VALVE |
| 18 | ANTIVIBRATION JOINT * (only for XR/PR or Opt. 76b) |
| 19 | ACCESS FITTINGS |
| 20 | MUFFLER |
| 21 | LIQUID RECEIVER (only with opt.01 THR) |
| 22 | STRAINER |
| f | FLANGED JOINT |
| e | ELECTRIC HEATER |
| PT | PRESSURE TRANSDUCER |
| PZH | HIGH PRESSURE SWITCH 22.7 bar |
| TZAH | HIGH TEMPERATURE SWITCH (MOTOR THERMISTOR) |
| PSAL | LOW PRESSURE LIMITER (CONTROLLER FUNCTION) |
| TT | TEMPERATURE TRANSDUCER |
| PI | PRESSURE GAUGE |

Water inlet and outlet are indicative. Please refer to the machine dimensional diagrams for exact water connections.
The series is composed by MONO (one circuit) and DUAL (two circuits) units.

*Table 3– Units PS and TS*

| REFRIGERANT | PED/PER GROUP | LINE | PS [bar] | TS [°C] |
|---|---|---|---|---|
| R134a<br>R1234ze | 2 | HIGH PRESSURE GAS | 25.5 | +10/+120°C |
| | | HIGH PRESSURE LIQ | 25.5 | -10/+80°C |
| | | LOW PRESSURE | 15.5 | -20/+80°C |
| **WATER CIRCUITS** | | WATER IN/OUT | 10 | -15/+55°C |

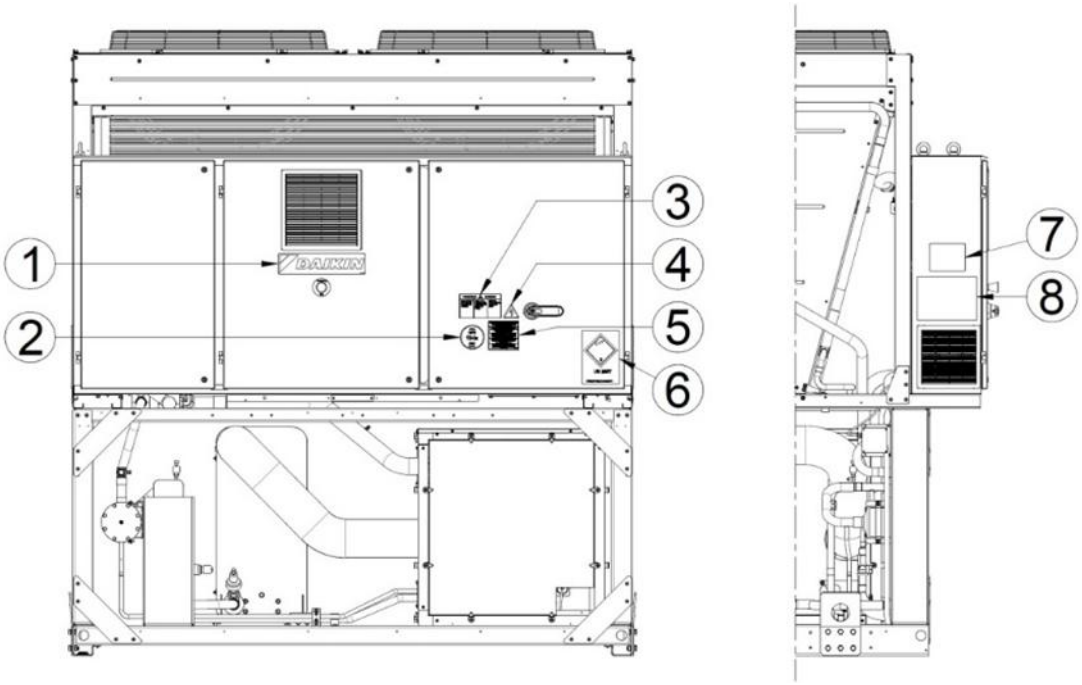


***Fig. 3- Description of the labels applied to the electrical panel***

*Table 4- Label Identification*

| | | | |
|---|---|---|---|
| **1** | – Manufacturer's logo | **5** | – Cable tightening warning |
| **2** | – Gas type | **6** | – Transportation Label UN2857 |
| **3** | – Hazardous Voltage warning | **7** | – Unit nameplate data |
| **4** | – Electrical hazard symbol | **8** | – Lifting instruction |

# 1 INTRODUCTION

**This manual is an important supporting document for qualified personnel but it is not intended to replace such personnel.**

READ THIS MANUAL CAREFULLY BEFORE INSTALLING AND STARTING UP THE UNIT.
IMPROPER INSTALLATION COULD RESULT IN ELECTRIC SHOCK, SHORT-CIRCUIT, LEAKS, FIRE OR OTHER DAMAGE TO THE EQUIPMENT OR INJURE TO PEOPLE.
THE UNIT MUST BE INSTALLED BY A PROFESSIONAL OPERATOR/TECHNICIAN
UNIT STARTUP HAS TO BE PERFORMED BY AUTHORIZED AND TRAINED PROFESSIONAL
ALL ACTIVITIES HAVE TO BE PERFORMED ACCORDING TO LOCAL LAWS AND REGULATION.
**UNIT INSTALLATION AND START UP IS ABOSOLUTELY FORBIDDEN IF ALL INSTRUCTION CONTAINED IN THIS MANUAL ARE NOT CLEAR.**
IF CASE OF DOUBT CONTACT THE MANUFACTURER REPRESENTATIVE FOR ADVICE AND INFORMATION.

## 1.1 Precautions against residual risks

1. Install the unit according to the instructions set out in this manual
2. Regularly carry out all the maintenance operations foreseen in this manual
3. Wear protective equipment (gloves, eye protection, hard hat, etc.) suited to the work in hand; do not wear clothes or accessories that can get caught or sucked in by flows of air; tie back long hair before entering the unit
4. Before opening the machine panelling make sure that it is firmly hinged to the machine
5. The fins on heat exchangers and the edges of metal components and panels can cause cuts
6. Do not remove the guards from mobile components while the unit is operating
7. Make sure that mobile component guards are fitted correctly before restarting the unit
8. Fans, motors and belts drives might be running: before entering, always wait for these to stop and take appropriate measures to prevent them from starting up
9. The surfaces of the machine and pipes can get very hot or cold and cause the risk of scalding
10. Never exceed the maximum pressure limit (PS) of the water circuit of the unit.
11. Before removing parts on the pressurised water circuits, close the section of the piping concerned and drain the fluid gradually to stabilise the pressure at the atmospheric level
12. Do not use your hands to check possible refrigerant leaks
13. Disable the unit from the mains using the main switch before opening the control panel
14. Check that the unit has been grounded correctly before starting it
15. Install the machine in a suitable area; in particular, do not install it outdoors if it is intended for use indoors
16. Do not use cables with inadequate sections nor extension cord connections, even for very short periods or emergencies
17. For units with power correction capacitors, wait 5 minutes after removing the electric power supply before accessing the inside of the switch board
18. If the unit is equipped with compressors with integrated inverter, disconnect it from the mains and wait a minimum of 20 minutes before accessing it to carry out maintenance: residual energy in the components, which takes at least this length of time to dissipate, poses the risk of electrocution
19. The unit contains pressurised refrigerant gas: the pressurised equipment must not be touched except during maintenance, which must be entrusted to qualified and authorised personnel
20. Connect up the utilities to the unit following the indications set out in this manual and on the panelling of the unit itself
21. In order to avoid an environmental risk, make sure that any leaking fluid is collected in suitable devices in accordance with local regulations.
22. If a part needs to be dismantled, make sure it is correctly re-assembled before starting the unit
23. When the rules in force require the installation of fire-fighting systems near the machine, check that these are suitable for extinguishing fires on electrical equipment and on the lubricating oil of the compressor and the refrigerant, as specified on the safety data sheets of these fluids
24. When the unit is equipped with devices for venting overpressure (safety valves): when these valves are triggered, the refrigerant gas is released at a high temperature and speed; prevent the release of gas from harming people or objects and, if necessary, discharge the gas according to the provisions of EN 378-3 and the local regulations in force.
25. Keep all the safety devices in good working order and check them periodically according to the regulations in force
26. Keep all lubricants in suitably marked containers
27. Do not store inflammable liquids near the unit
28. Solder or braze only empty pipes after removing all traces of lubricant oil; do not use flames or other heat sources in the vicinity of pipes containing refrigerant fluid
29. Do not use naked flames near the unit
30. The machinery must be installed in structures protected against atmospheric discharge according to the applicable laws and technical standards
31. Do not bend or hit pipes containing pressurised fluids
32. It is not permitted to walk or rest other objects on the machines

33. The user is responsible for overall evaluation of the risk of fire in the place of installation (for example, calculation of the fire load)
34. During transport, always secure the unit to the bed of the vehicle to prevent it from moving about and overturning
35. The machine must be transported according to the regulations in force taking into account the characteristics of the fluids in the machine and the description of these on the safety data sheet
36. Inappropriate transport can cause damage to the machine and even leaking of the refrigerant fluid. Before startup, the machine must be checked for leaks and repaired accordingly.
37. The accidental discharge of refrigerant in a closed area can cause a lack of oxygen and, therefore, the risk of asphyxiation: install the machinery in a well ventilated environment according to EN 378-3 and the local regulations in force.
38. The installation must comply with the requirements of EN 378-3 and the local regulations in force; in the case of installations indoors, good ventilation must be guaranteed and refrigerant detectors must be fitted when necessary.

## 1.2 Description

The unit you bought is an “air cooled chiller”, a machine aimed to cool water (or water-glycol mixture) within the limits described in the following manual. The unit operation is based on vapour compression, condensation and evaporation according to the inverse Carnot cycle. The main components are:

- Screw compressor to rise the refrigerant vapour pressure from evaporating pressure to condensing pressure
- Condenser, where high pressure vapour condensates rejecting heat removed from the chilled water in the atmosphere thanks to an air-cooled heat exchanger.
- Expansion valve allowing to reduced the pressure of condensed liquid from condensing pressure to evaporating pressure.
- Evaporator, where the low pressure liquid refrigerant evaporates to cool the water

All units are delivered with **wiring diagrams**, **certified drawings, nameplate**; and **DOC (Declaration Of Conformity)**; these documents show all technical data for the unit you have bought and they **MUST BE CONSIDERED ESSENTIAL DOCUMENTS OF THIS MANUAL.**
In case of any discrepancy between this manual and the equipment’s documents please refer to on board documents. In case of any doubt contact the manufacturer representative.

The purpose of this manual is to allow the installer and the qualified operator to ensure proper installation, commissioning and maintenance of the unit, without any risk to people, animals and/or objects.

## 1.3 Information about R1234ze(E) refrigerant

This product can be equipped with refrigerant R1234ze(E) which has minimal impact to the environment, thanks to its low value of Global Warming Potential (GWP).
R1234ze(E) refrigerant is classified by European Directive 2014/68/EU as a Group 2 (non-dangerous) substance, as **it is nonflammable at standard ambient temperature and non-toxic**. Due to this, no special precautions are required for storage, transport and handling.
Daikin Applied Europe S.p.A. products comply with applicable European Directives and refer for unit design to product Standard EN378:2016 and industrial Standard ISO5149. Local authorities approval should be verified referring to European Standard EN378 and/or ISO 5149 (where R1234ze(E) is classified A2L – Mildly flammable gas).

***Table 5- Physical characteristics of refrigerant R1234ze(E)***

| | |
|---|---|
| **Safety Class** | A2L |
| **PED Fluid Group** | 2 |
| **Pratical limit (kg/m$^3$)** | 0 061 |
| **ATEL/ ODL (kg/m$^3$)** | 0,28 |
| **LFL (kg/m$^3$)@ 60°C** | 0 303 |
| **Vapour density @25°C, 101.3 kPa (kg/m$^3$)** | 4,66 |
| **Molecular Mass** | 114,0 |
| **Normal Boling Point (°C)** | -19 |
| **GWP (100 yr ITH)** | 1,4 |
| **Auto Ignition Temperature (°C)** | 368 |

## 1.4 Information about installation

The chiller has to be installed in open air or machinery room (location classification III).
To ensure location classification III a mechanical vent on the secondary circuit(s) has to be installed.
Local building codes and safety standards shall be followed; in absence of local codes and standards refer to EN 378-3:2016 as a guide.
In paragraph "Additional guidelines for safe use of R1234ze(E)" there are provided additional informations that should be added to the requirements of safety standards and building codes.

**Additional guidelines for safe use of R1234ze(E) for equipment located in the open air**

Refrigerating systems sited in the open air shall be positioned to avoid leaked refrigerant flowing into a building or otherwise endangering people and property.
The refrigerant shall not be able to flow into any ventilation fresh air opening, doorway, trap door or similar opening in the event of a leak. Where a shelter is provided for refrigerating equipment sited in the open air it shall have natural or forced ventilation.
For refrigeration systems installed outside in a location where a release of refrigerant can stagnate e.g. below ground, then the installation shall comply with the requirements for gas detection and ventilation of machinery rooms.

**Additional guidelines for safe use of R1234ze(E) for equipment located in a machinery room**

When a machinery room is chosen for the location of the refrigerating equipment it shall be located in accordance with local and national regulations. The following requirements (according to EN 378-3:2016) can be used for the assessment.

- A risk analysis based on the safety concept for the refrigerating system (as determined by the manufacturer and including the charge and safety classification of the refrigerant used) shall be conducted to determine whether it is necessary to place the refrigerating system in a separate refrigeration machinery room.
- Machinery rooms should not be used as occupied spaces. The building owner or user shall ensure that access is permitted only by qualified and trained personnel doing the necessary maintenance to the machinery room or general plant.
- Machinery rooms shall not be used for storage with the exception of tools, spare parts and compressor oil for the installed equipment. Any refrigerants, or flammable or toxic materials shall be stored as required by national regulations.
- Open (naked) flames shall not be permitted in machinery rooms, except for welding, brazing or similar activity and then only provided the refrigerant concentration is monitored and adequate ventilation is ensured. Such open flames shall not be left unattended.
- A remote switching (emergency type) for stopping the refrigerating system shall be provided outside the room (near the door). A similar acting switch shall be located at a suitable location inside the room.
- All piping and ducting passing throught floors, ceiling and walls of machinery room shall be sealed.
- Hot surfaces shall not exceed a temperature of 80 % of the auto-ignition temperature (in °C) or 100 K less than the auto-ignition temperature of the refrigerant, whichever is higher.

***Table 6– R1234ze(E) ignition and max temperatures***

| Refrigerant | Auto ignition temperature | Maximum surface temperature |
|---|---|---|
| R1234ze(E) | 368 °C | 268 °C |

- Machinery rooms shall have doors opening outward and sufficient in number to ensure freedom for persons to escape in an emergency; the doors shall be tight fitting, self-closing and so designed that they can be opened from inside (antipanic system).
- Special machinery rooms where the refrigerant charge is above the practical limit for the volume of the room shall have a door that either opens directly to the outside air or through a dedicated vestibule equipped with self-closing, tight-fitting doors.
- The ventilation of machinery rooms shall be sufficient both for normal operating conditions and emergencies.
- Ventilation for normal operating conditions shall be in accordance with national regulations.
- The emergency mechanical ventilation system shall be activated by a detector(s), located in the machinery room.
  - This ventilation system shall be:
    - independent of any other ventilation system on the site.
    - provided with two independent emergency controls one located outside the machinery room, and the other inside.
  - The emergency exhaust ventilation fan shall:
    - Be either in the air flow with the motor outside the airflow, or rated for hazardous areas (according to the assessment).
    - Be located to avoid pressurization of the exhaust ductwork in the machinery room.
    - not cause sparks to occur if it contacts the duct material.
  - Airflow of the emergency mechanical ventilation shall be at least

$$V = 0{,}014 \times m^2$$

where

V is the air flow rate in $m^3/s$;

m is the mass of refrigerant charge, in kg, in the refrigerating system with the largest charge, any part of which is located in the machinery room;

0.014 is a conversion factor.
  - Mechanical ventilation shall be operated continuously or shall be switched on by the detector.
- Detector shall automatically activate an alarm, start mechanical ventilation and stop the system when it triggers.
- The location of detectors shall be chosen in relation to the refrigerant and they shall be located where the refrigerant from the leak will concentrate.
- The positioning of the detector shall be done with due consideration of local airflow patterns, accounting for location sources of ventilation and louvers. Consideration shall also be given to the possibility of mechanical damage or contamination.
- At least one detector shall be installed in each machinery room or the occupied space being considered and/or at the lowest underground room for refrigerants heavier than air and at the highest point for refrigerants lighter than air.
- Detectors shall be continuously monitored for functioning. In the case of a detector failure, the emergency sequence should be activated as if refrigerant had been detected.
- The pre-set value for the refrigerant detector at 30 °C or 0 °C, whichever is more critical, shall be set to 25 % of the LFL. The detector shall continue to activate at higher concentrations.

***Table 7 – R1234ze(E) LFL value***

| Refrigerant | LFL | Pre-set alarm |
|---|---|---|
| R1234ze(E) | 0,303 kg/m$^3$ | 0,07575 kg/m$^3$ 16500 ppm |

- All electrical equipment (not only the refrigerating system) shall be selected to be suitable for use in the zones identified in the risk assessment. Electrical equipment shall be deemed to comply with the requirements if the electrical supply is isolated when the refrigerant concentration reaches 25 % of the lower flammable limit or less.
- Machinery rooms or special machinery rooms shall be **clearly marked** as such on the entrances to the room, together with warning notices indicating that unauthorized persons shall not enter and that smoking, naked light or flames are prohibited. The notices shall also state that, in the event of an emergency, only authorized persons conversant with emergency procedures shall decide whether to enter the machinery room. Additionally, warning notices shall be displayed prohibiting unauthorized operation of the system
- The owner / operator shall keep an updated logbook of the refrigerating system.

***The optional leak detector supplied by DAE with the chiller should be used exclusively to check refrigerant leakage from the chiller itself***

## 1.5 Transport limits

To determine the maximum load supported by the unit, the main acceleration values and the VDI 2700 coefficients have been considered:

| Feature | Description |
|---|---|
| Type of road | Paved public roads (urban, suburban, motorways) |
| Fund conditions | Dry, standard conditions (not snow/ice) |
| Type of vehicle | Standard trucks / lorries / industrial vehicles |
| Typical speed | Around 70-80 km/h on suburban roads or motorways |
| Manoeuvres considered | Abrupt braking, sudden changes of direction, sharp bends |

| Direction / Type of manoeuvre | Basic value for road vehicles (VDI BASE LINE) | DAIKIN STANDARD value for on-road vehicles | Comments / special cases / main routes |
|---|---|---|---|
| Forward (frontal acceleration) | 0,8 g | 2 g | for hard braking; often 1.0 g is also found in stricter regulations or combined |
| Transverse (lateral) | 0,5 g | 1,5 g | crosswinds, bends, abrupt changes of direction |
| Verticale | up to 1.0 g (peaks) | 2 g | due to potholes, roughness of the road surface, uphill/downhill; it is less frequently used as a constant base but as a peak value |

According to the formula below:

$$a_{tot} = \sqrt{a_{forward}{}^2 + a_{lateral}{}^2 + a_{vertical}{}^2}$$

the maximum acceleration value is:

$a_{tot}$ =***3,2g***

## 2 RECEIVING THE UNIT

Inspect the unit immediately after delivery. Make sure that the machine is intact in all its parts and that there are no deformations due to impacts. All components described in the delivery note must be inspected and checked.
Should any damage occur upon receipt of the machine, do not remove the damaged material and immediately make a written complaint to the transport company, requesting the inspection of the unit; do not repair until inspection by the transport company representative is carried out. Immediately report the damage to the manufacturer representative, a set of photographs is helpful in recognizing responsibility.
Unit restitution is intended as ex-factory Daikin Applied Europe S.p.A.
Daikin Applied Europe S.p.A. declines all responsibility for any damage that the machine may suffer during transport to the destination.
Use extreme caution when handling the unit to prevent damage to components.
Before installing the unit, check that the model and power supply voltage shown on the nameplate are correct. Responsibility for any damage after acceptance of the unit cannot be attributed to the manufacturer.

# 3 OPERATING LIMITS

## 3.1 Storage

If the unit needs to be stored before installation, it is necessary to follow some precautions:

- Do not remove the protective plastic.
- Protect the unit from dust, bad weather and any rodents.
- Do not expose the unit to direct sunlight.
- Do not use heat sources and / or open flames near the machine.

Although the unit is covered with a heat-shrink plastic sheet, it is not intended for long-term storage and must be removed and replaced by tarpaulins or the like, more suitable for a longer period.

Environmental conditions must be within the following limits:

***Table 8– Units environmental conditions***

| | |
|---|---|
| **Minimum ambient temperature** | -20°C |
| **Maximum ambient temperature** | +57°C |
| **Maximum R.H.** | 95% not condensing |

Storing below the minimum temperature may cause damage to components. Storing above the maximum temperature results in safety valves opening, with subsequent refrigerant loss. Storing in a humid atmosphere may damage electronic components.

## 3.2 Operation

TZD range of chillers is available with three refrigerants:

- R1234ze (EWAH)
- R134a (EWAD)

All available in four efficiency tiers:

- Silver (S-)
- Gold (X-)
- Platinum (P-)
- Platinum Plus (L-)

Operating envelope can be extended through selection of specific options (such as high ambient kit, brine version, etc) which allow the unit to operate with evaporator leaving water temperature below +4°C and/or ambient temperature at full load above +46°C.
The following mentioned values represent a guideline, **please refer to the Chiller Selection Software (CSS) for real operating limits for the specific model.**

As a general rule, the unit should be operated with an evaporator water flow rate between 50% and 120% of nominal flow rate (at standard operating conditions), however check with the chiller selection software the correct minimum and maximum allowed values for the specific model.
**Operation out of the mentioned limits may damage the unit.**
In case of any doubt, contact manufacturer representative.

## EWAH-MZD

| | |
|---|---|
| **OAT** | Outside ambient air temperature |
| **ELWT** | Evaporator leaving water temperature |
| **Ref 1** | Operation with ELWT < 4 °C requires Option 08 (brine) and glycol |
| **Ref 2** | Operation with ELWT > 18 °C requires Option 187 (high evaporator leaving water temperature) |
| **Ref 3** | Operation requires option 142 (High ambient temperature kit) |

***The charts shown in these pages constitute a guideline on operating limits in the range. Refer to the CSS selection software for the actual operating limits in the working conditions for each model.***

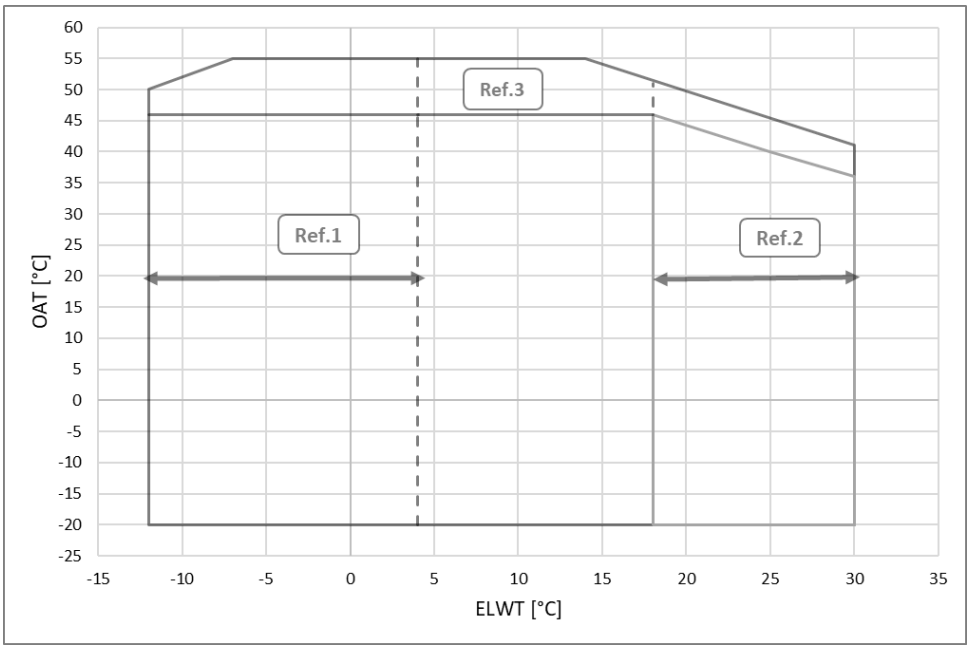


***Fig. 4– EWAH-MZD Silver and Gold unit envelope***

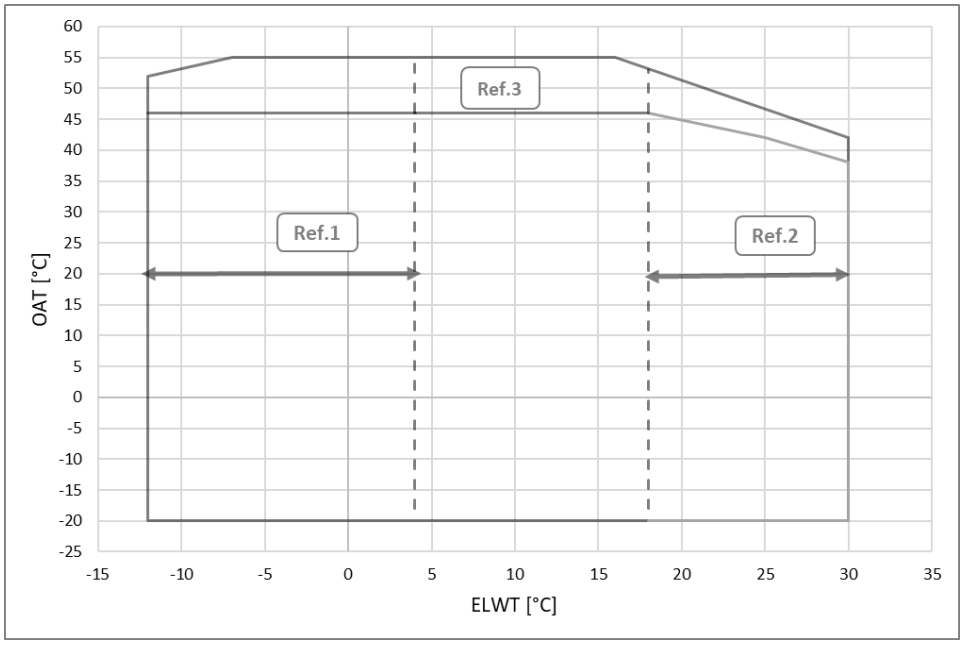


***Fig. 5– EWAH-MZD Platinum and Platinum Plus unit envelope***

## EWAD-MZD

| | |
|---|---|
| **OAT** | Outside ambient air temperature |
| **ELWT** | Evaporator leaving water temperature |
| **Ref 1** | Operation with ELWT < 4 °C requires Option 08 (brine) and glycol |
| **Ref 2** | Operation with ELWT > 18 °C requires Option 187 (high evaporator leaving water temperature) |
| **Ref 3** | Operation requires option 142 (High ambient temperature kit) |
| **Ref 4** | If running conditions are included in this area, unit will work at part load. |

***The charts shown in these pages constitute a guideline on operating limits in the range. Refer to the CSS selection software for the actual operating limits in the working conditions for each model.***

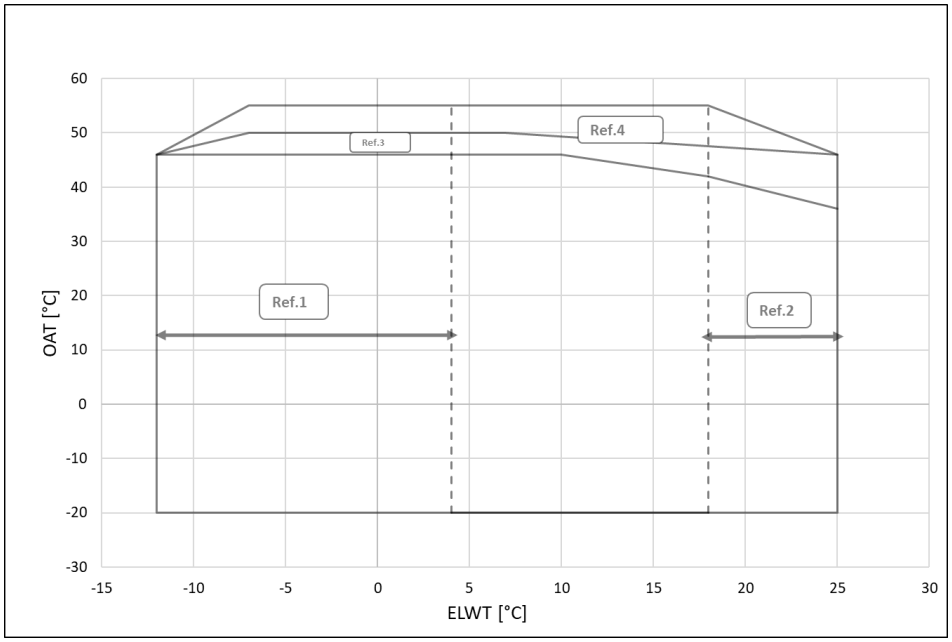


***Fig. 6– EWAD-MZD Silver and Gold unit envelope***

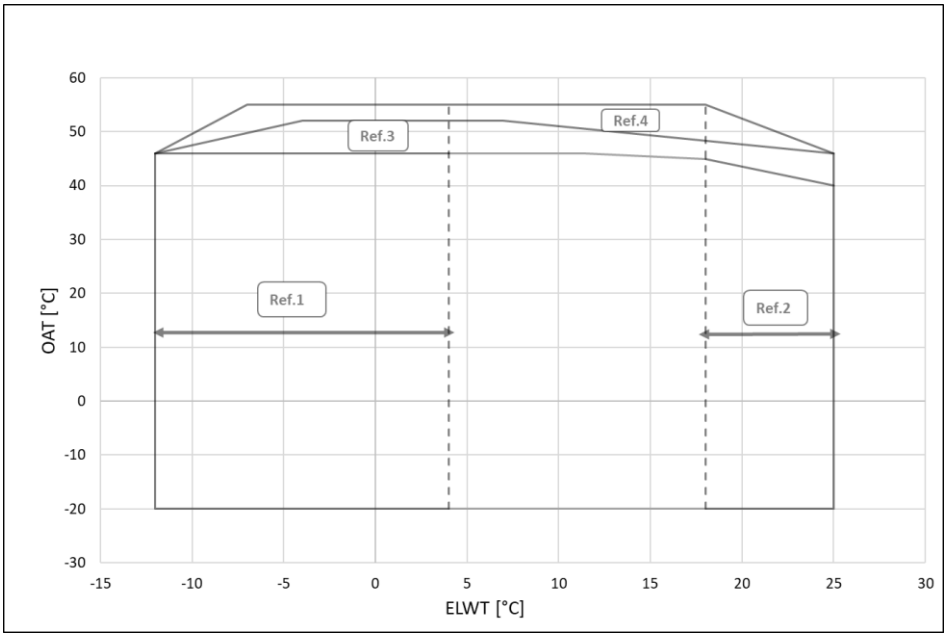


***Fig. 7– EWAD-MZD Platinum and Platinum Plus unit envelope***

## 3.3 Corrective factors

In case of units working at altitudes higher than 0 metre above sea level, following corrective factors shall be applied of cooling capacity and absorbed power input:

***Table 9– Altitude correction factor***

| **A** | **0** | **300** | **600** | **900** | **1200** | **1500** | **1800** |
|---|---|---|---|---|---|---|---|
| **B** | 1013 | 977 | 942 | 908 | 875 | 843 | 812 |
| **C** | 1.000 | 0.993 | 0.986 | 0.979 | 0.973 | 0.967 | 0.960 |
| **D** | 1.000 | 1.005 | 1.009 | 1.015 | 1.021 | 1.026 | 1.031 |

**Legend:**
**A** = Altitude above sea level (m)
**B** = Barometric pressure (mbar)
**C** = Correction factor of the cooling capacity
**D** = Correction factor of the absorbed power

***The maximum operating altitude is 2000 m above sea level.***
***Contact the factory if the unit is to be installed at altitudes 1000 m above sea level.***

***Table 10 – Minimum percentage of glycol in case of low ambient temperature***

| **AAT(2)** | **-3** | **-8** | **-15** | **-20** |
|---|---|---|---|---|
| **A(1)** | 10% | 20% | 30% | 40% |
| **AAT(2)** | **-3** | **-7** | **-12** | **-20** |
| **B(1)** | 10% | 20% | 30% | 40% |

**Legend:**
**AAT** = Ambient air temperature (°C) (2)
**A** = Ethylene glycol (%) (1)
**B** = Propylene glycol (%) (1)
**(1)** Minimum percentage of glycol to prevent freezing of the water circuit at the indicated ambient air temperature
**(2)** Ambient air temperature that exceeds the operating limits of the unit.
Protection of the water circuit is necessary in the winter season, even when the unit is not operating.

# 4 MECHANICAL INSTALLATION

## 4.1 Safety

The unit must be firmly secured to the soil.
It is essential to observe the following instructions:

- The unit can only be lifted using the lifting points marked in yellow fixed to its base.
- It is forbidden to access the electrical components without having opened the unit main switch and switched off the power supply.
- It is forbidden to access the electrical components without using an insulating platform. Do not access the electrical components if water and/or moisture are present.
- Sharp edges and the surface of the condenser section could cause injury. Avoid direct contact and use adeguate protection device
- Switch off power supply, by opening the main switch, before servicing the cooling fans and/or compressors. Failure to observe this rule could result in serious personal injury.
- Do not introduce solid objects into the water pipes while the unit is connected to the system.
- A mechanical filter must be installed on the water pipe connected to the heat exchanger inlet.
- The unit is supplied with safety valves, that are installed both on the high-pressure and on the low-pressure sides of the refrigerant circuit.

**It is absolutely forbidden to remove all protections of moving parts.**

In case of sudden stop of the unit, follow the instructions on the **Control Panel Operating Manual** which is part of the onboard documentation delivered to the end user.
- It is strongly recommended to perform installation and maintenance with other people.

***Avoid installing the chiller in areas that could be dangerous during maintenance operations, such as platforms without parapets or railings or areas not complying with the clearance requirements around the chiller***

DAE units can be installed without charge restrictions into machinery rooms or in open air (location class.III).
According to EN 378-1, a mechanical vent on the secondary circuit(s) has to be installed: to ensure location classification III the system shall be classified as an “indirect vented closed system”.

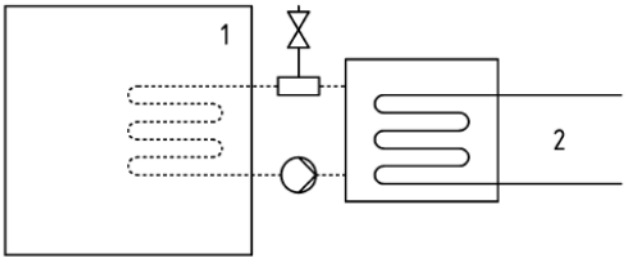


***Fig. 8- Indirect vented closed system***

Key
1) Occupied Space
2) Refrigerant containing part(s)

Machinery rooms shall not be considered occupied space (except as defined in part 3, 5.1: machinery room used as a maintenance workspace shall be considered occupied spaces under access category c).
Each exchanger (evaporator and condenser) is provided with a safety valve installed on a changeover valve that allows maintenance and periodic checks, without losing a significant amount of refrigerant. Do not leave the safety valve in the intermediate position.
To prevent damages due to inhalation and direct contact with refrigerant gas, the safety valve outlets must be connected with a conveyor pipe before operations. These pipes must be installed so that, in case the valve opens, the discharged refrigerant flow not invest people and/or things, or can enter the building through windows and/or other openings.
The installer is responsible for connecting the safety valve to the purge pipe and pipe dimensioning. In this regard, refer to the harmonized standard EN13136 to dimension the drain pipes to be connected to the safety valves.
All precautions concerning handling of refrigerant must be observed in accordance with local regulations.

#### 4.1.1 Safety devices

In accordance with the Pressure Equipment Directive the following protection devices are used:

- High pressure switch → safety accessory.
- External relief valve (refrigerant side) → over pressure protection.
- External relief valve (heat transfer fluid side) → **The selection of these relief valves must be made by the personnel responsible for completing the hydraulic circuit(s).**

All factory-installed relief valves are lead-sealed to prevent any calibration change.
If the relief valves are installed on a changeover valve, this is equipped with a relief valve on both outlets. Only one of the two relief valves is operating, the other one is isolated. Never leave the changeover valve in the intermediate position.
If a relief valve is removed for checking or replacement please ensure that there is always an active relief valve on each of the changeover valves installed in the unit.

### 4.2 Handling and lifting instructions

It is mandatory to follow the next instructions when handling and lifting the unit:

- The lifiting equipment, ropes/chains, accessory and the rigging procedure must be in conformity with local regulations and current rules.
- Only the lifting points, fixed to the base frame, must be used to lift the unit. Lifting points are identified by red colour.
- All lifting points must be used during rigging procedure.
- Only cloasable hooks must be used and safely fixed before rigging procedure
- Ropes/chains and hooks must be adequate for load. See specific lifting weight of the unit on the identification label
- Crosswise spreader bars 2300 mm long must be used to avoid damage to the unit.
- Lifting ropes/chains must have a minimum lenght as it is specified in the drawing
- The installer has the responsibility for proper sizing of rigging equipment and its proper use. It is recommended to use ropes/chains each with minimum vertical load capacity equal or larger than unit weight.
- Remove the side panels of compressor box (if installed) before rigging to avoid damages.
- The unit must be slowly lifted and properly leveled. Adjust the rigging equipment, if needed, to guarantee the leveling.
- Transportation of the unit is allowed only by tarpaulin truck. Trasportation by open truck is not allowed.
- Secure the unit inside the truck to prevent it from moving and causing damages.
- Do not allow any part of the unit to fall during transportation or loading/unloading.
- Avoid bumping and/or jolting during loading/unloading unit from the truck and moving it.
- Do not push or pull the unit from any part other than the base frame.

During the handling of the machine, it is mandatory to provide all the devices necessary to guarantee personal safety.
The installer has the responsibility to ensure the selection and correct use of the lifting equipment.
The machine must be lifted with the utmost attention and care following lifting label instructions; lift the unit very slowly, keeping it perfectly level. The unit must be empty (no water, nor glycol inside).

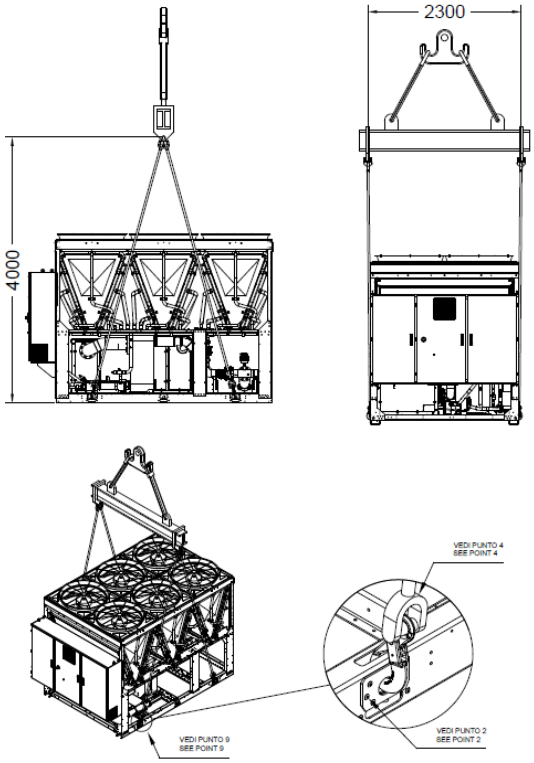


**Unit with 4 lifting points**

The drawing shows only the 6 fans version.
The lifting mode is the same regardless of the number of fans.

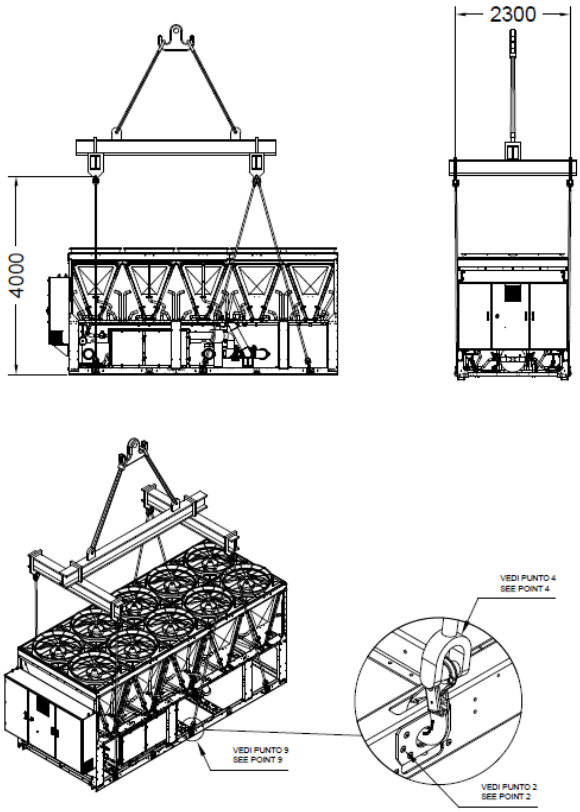


**Unit with 6 lifting points**

The drawing shows only the 10 fans version.
The lifting mode is the same regardless of the number of fans.

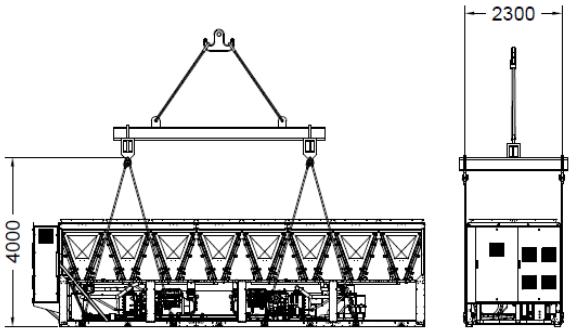


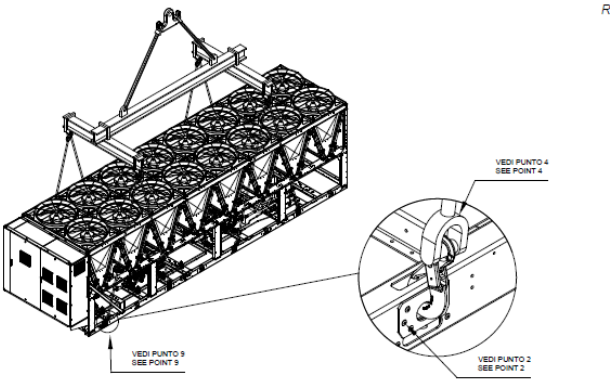


**Unit with 8 lifting points**
The drawing shows only the 16 fans version.
The lifting mode is the same regardless of the number of fans.

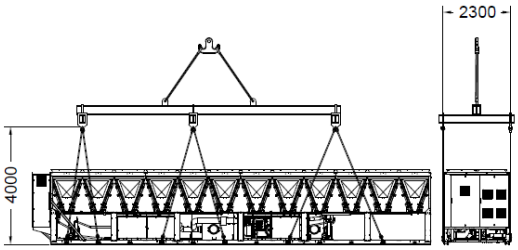


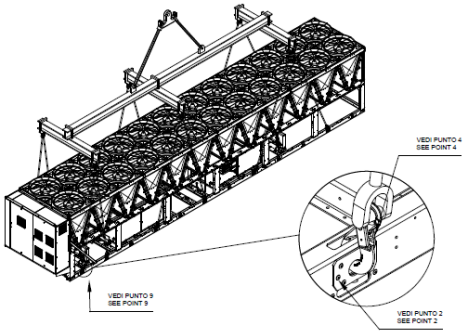


**Unit with 12 lifting points**
The drawing shows only the 24 fans version.
The lifting mode is the same regardless of the number of fans.

***Fig. 9– Lifting instructions***

***Consult the dimensional drawing for the hydraulic and electrical connection of the units.***
***The overall dimensions of the machine, as well as the weights described in this manual, are purely indicative.***
***For some unit models, some components might be installed on an external skid linked to the main base frame, resulting in an unit longer than the standard one. Always refer to the dimensional drawing for the right value.***
***The contractual dimensional drawing and the related electrical scheme are delivered to the customer when ordering.***
***It is forbidden to lift the unit below -20°C ambient temperature.***

### 4.2.1 Safety hook

The characteristics of the hook to be used for lifting the units are as follows (a hook with the same or better characteristics can also be used, the load capacity, in fact, can be greater, but the hook dimensions have to be the same as those shown in the picture below).

| LHW Safety Hook | Model | Load capacity [kg] | e [mm] | h [mm] | a [mm] | b [mm] | d1 [mm] | d2 [mm] | g [mm] | s max. [mm] | weight [kg/pc.] |
|---|---|---|---|---|---|---|---|---|---|---|---|
| 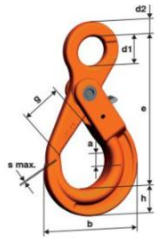 | LHW10 | 4,000 | 168 | 30 | 29 | 107 | 33 | 16 | 45 | 1 | 1,57 |

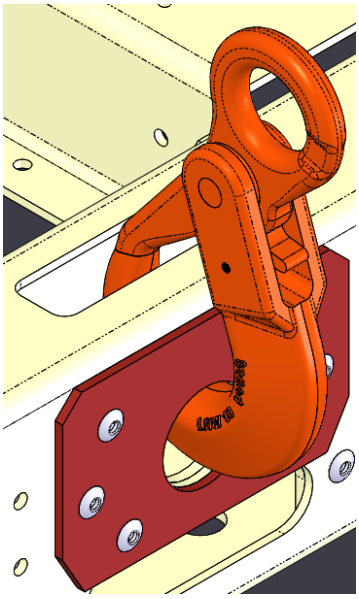

***Fig. 10– Safety Hook attachment***

### 4.2.2 Lifting shackles

In the absence of a suitable lifting hook, lifting shackles can be used.

| Lift capacity | Size | Dimensions | | | | | | | | | | Weight | |
|---|---|---|---|---|---|---|---|---|---|---|---|---|---|
| t | inches | a mm | b mm | c mm | d mm | e mm | f mm | g mm | G4151 H mm | G 4153 H Mm | i mm | G 4151 Kg | G 4153 Kg |
| 8,5 | 1 | 25 | 28 | 59 | 25 | 43 | 85 | 154 | 137 | 150 | 25 | 2,08 | 2,46 |

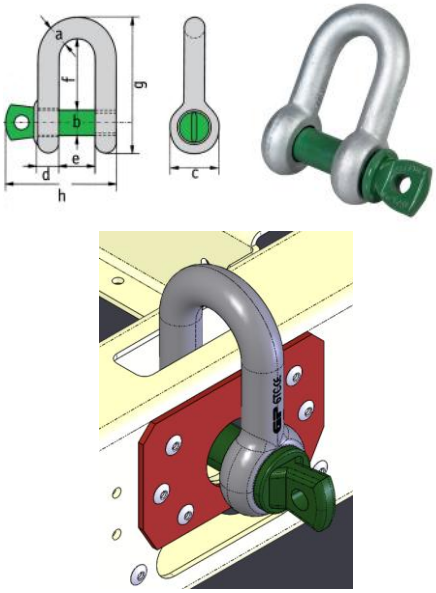


***Fig. 11Lifting shackles attachment***

### 4.2.3 OPT 71 Kit container

While lifting the unit, the optional plates (OPT 71) must be removed to guarantee the correct installation on the basement (see figure below).

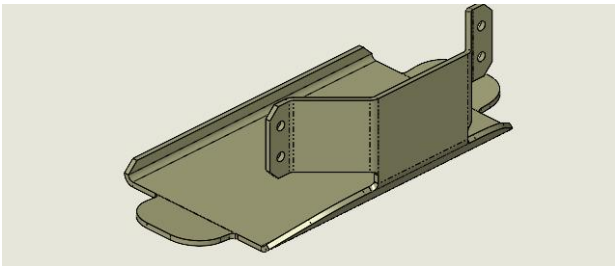

***Fig. 12 – OPT 71 Plates***

To remove the plates, unscrew the 4 M8 bolts used to connect the plate to the unit frame (see figure below). Repeat this operation on each connection plate.

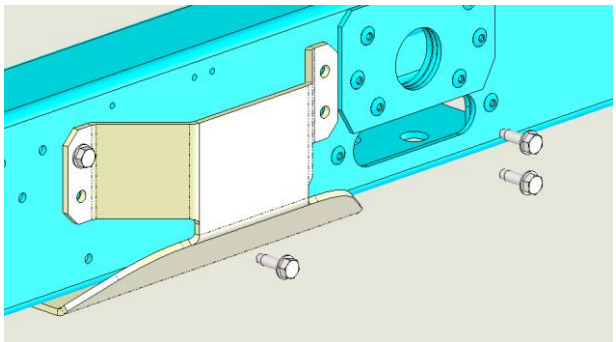

***Fig. 13 – M8 bolts for plate-unit frame connection***

## 4.3 Positioning and assembly

All units are designed for installation outdoors, i.e. on balconies or on the ground, provided that the installation area is free of obstacles that could reduce air flow to the condensers coils.
The unit must be installed on a robust and perfectly level foundation; should the unit be installed on balconies or roofs, it might be necessary to use weight distribution beams.
For installation on the ground, a strong concrete base, at least 250 mm thickness and wider than the unit must be provided. This base must be able to support the weight of the unit.
The unit must be installed above antivibration mounts (AVM), rubber or spring types. The unit frame must be perfectly levelled above the AVM.
Installation such as in the Fig. 12 must always be avoided. In case the AVM are not adjustable, the flatness of the unit frame must be guaranteed by using metal plate spacers.
Before unit commissioning, the flatness must be verified by using a laser levelling device or other similar devices. The flatness shall not be over 5 mm for units within 7 m length and 10 mm for units over 7 m.
If the unit is installed in places that are easily accessible to people and animals, protection grids for the unit shall be installed.
To ensure the best performance on the installation site, the following precautions and instructions must be followed:

- avoid air flow recirculation;
- make sure that there are no obstacles to hamper air flow;
- make sure to provide a strong and solid foundation to reduce noise and vibrations;
- avoid installation in particularly dusty environments, in order to reduce soiling of condensers coils;
- the water in the system must be particularly clean and all traces of oil and rust must be removed. A mechanical water filter must be installed on the unit inlet piping;
- avoid the refrigerant discharge from the safety valves at the installation site. If necessary, it is possible to connect them with exhaust pipes whose cross-section and length must comply with national laws and European directives.

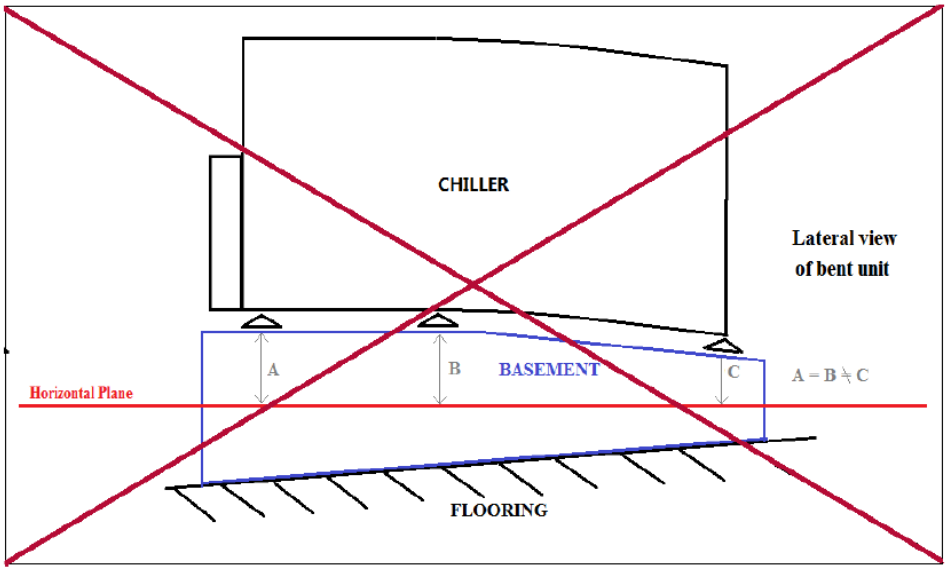


*Fig. 14– Unit levelling*

## 4.4 Noise and sound protection

The unit is a source of noise mainly due to rotation of compressors and fans.
The noise level for each model size is listed in sales documentation.
If the unit is correctly installed, operated and maintained, the noise emission level do not require any special protection device to operate continuously close to the unit without any risk.
In cases where the installation is subject to compliance with special sound requirements, it may be necessary to use additional noise attenuation devices. It is necessary to isolate the unit from its base with extreme care, correctly applying the anti-vibration elements, supplied as optional (Fig.13) . Flexible joints must be installed on the water connections, as well.

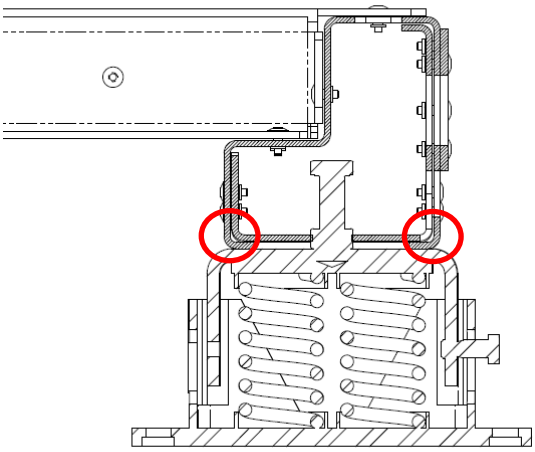

***Fig. 15– Mounting anti-vibration elements (supplied as optional)***

***In case of anti-vibration elements provided by a different supplier,***
***the load of the chiller on the anti-vibration element must be discharged on the external part of the frame and not on the internal plate (see picture above).***

### 4.4.1 Spring vibration dampers

Mount the vibration damper as shown in the following pictures.

1. **Insert M16 screw and nut in the central hole**

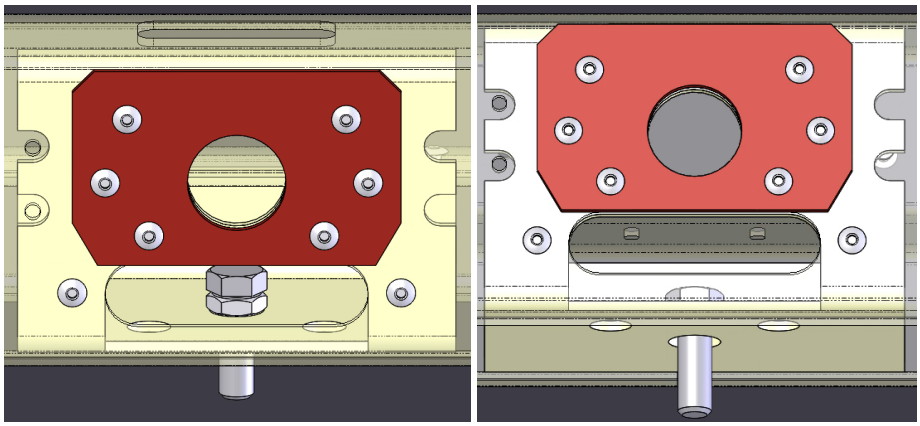

### 4.4.2 Fix the damper with the screw

Hold the screw and rotate (anticlockwise) the damper

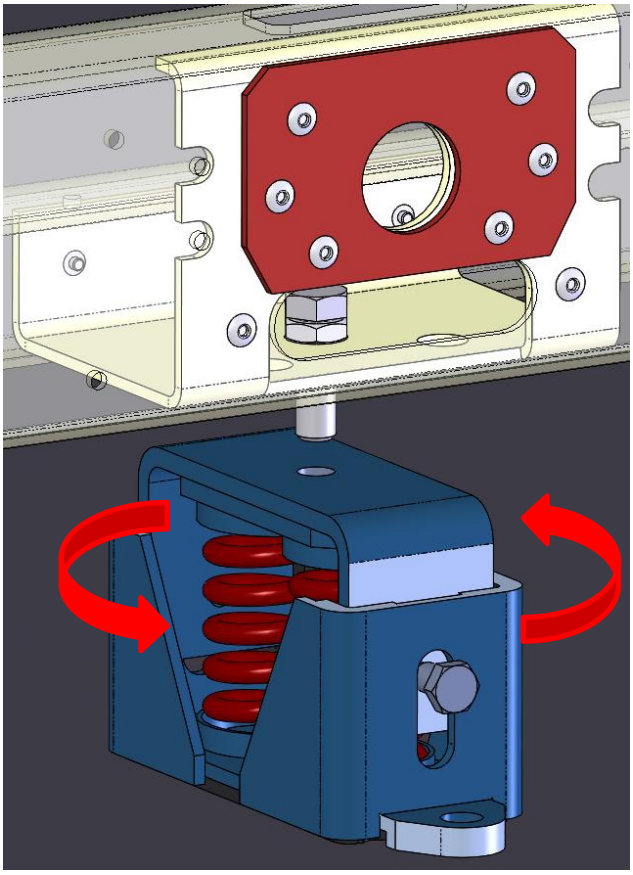

### 4.4.3 Adjustment

Finish tightening the vibration damper with the nut.

For dumper with 1 and 2 springs, the final position of the spring vibration dumper must be perpendicular to the frame (as shown below).

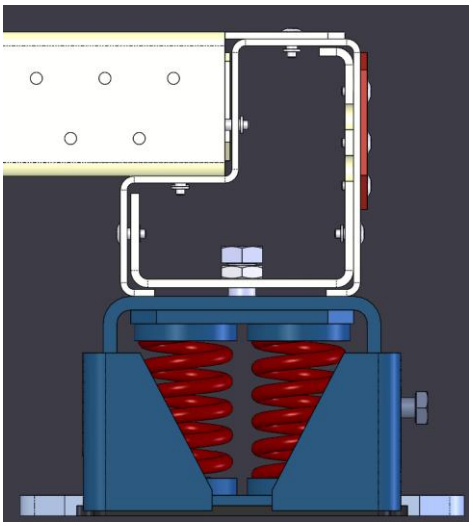

***Anti-vibration dampers shall be fixed to the floor in accordance with the installation requirements.***

## 4.5 Minumum space requirements

It is fundamental to respect minimum distances on all units in order to ensure optimum ventilation to the condenser coils. When deciding where to position the unit and to ensure a proper air flow, the following factors must be taken into consideration:

- Avoid any warm air recirculation
- Avoid insufficient air supply to the air-cooled condenser.

Both these conditions can cause an increase of condensing pressure, which leads to a reduction in energy efficiency and refrigerating capacity.
Any side of the unit must be accessible for post-installation maintenance operations. Fig. 14 shows the minimum space required.
**Vertical air discharge must not be obstructed for at least 5000mm.**

In case of two chillers installed in free field, minimum recommended distance between them is 3600 mm; in case of two chillers in a row, minimum distance is 1500 mm. The pictures below shows examples of recommended installations.

Should the unit be installed without observing the recommended minimum distances from walls and/or vertical obstacles, there could be a combination of warm air recirculation and/or insufficient supply to the air-cooled condenser which could cause a reduction of capacity and efficiency.
In any case, the microprocessor will allow the unit to adapt itself to new operating conditions and deliver the maximum available capacity under any given circumstances, even if the lateral distance is lower than recommended, unless the operating conditions should affect personnel safety or unit reliability.

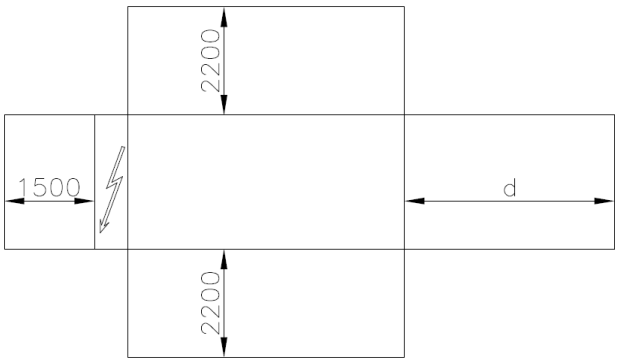


d= 1800 mm for single circuit units; d= 3000/3500 mm (according to evaporator dimensions) for dual circuit units.

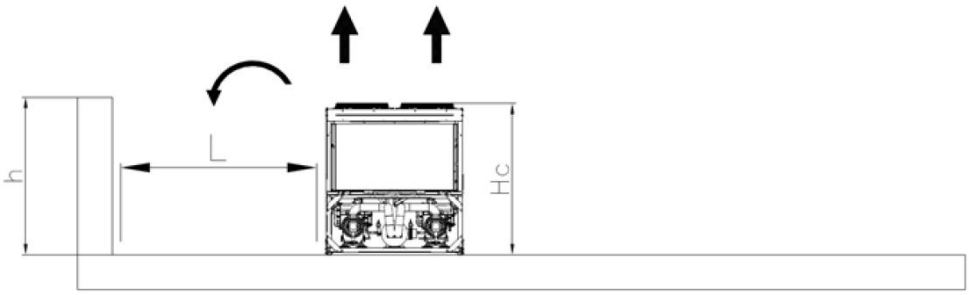


If h<Hc=2.4 m, minimum L=3.0 m; if h>Hc or L< 3.0 m
Contact your Daikin distributor to evaluate the various possible arrangements.

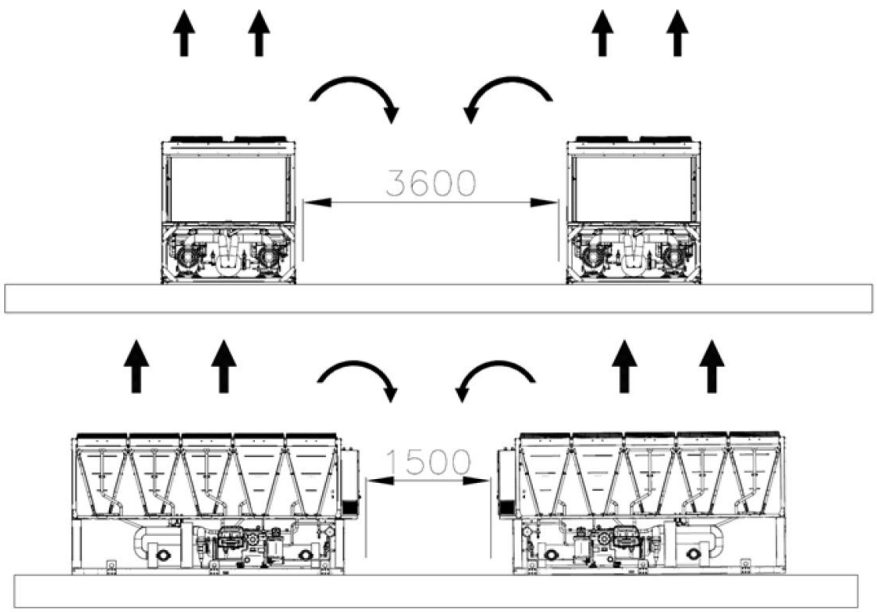


***Fig. 16- Minimum clearance requirements***

The above values are general guidelines. When consider unit installation is fundamental to consider proper clearances around the unit to perform all possible maintenance activities and replacing of unit's components in respect of safety standard. Any deviation from guidelines should be evaluated by local service provider.
There are specific situations which include multiple chiller installations. In this case the following recommendations are to be followed.

***Multiple chiller installed side by side in a free field with dominant wind.***
Considering an installation in areas with a dominant wind from a specific direction (as shown in the Fig.15):

- Chiller N°1: is performing normally without any ambient over-temperature
- Chiller N° 2: is working in a warmed ambient. The first circuit (from the left) is working with air recirculating from Chiller 1 and the second circuit with recirculating air from the chiller N°1 and recirculation from itself.
- Chiller N° 3: circuit on the left is working in a over-temperature ambient due to the recirculating air from the other two chillers, circuit on the right is working quite normally.
-

In order to avoid the hot air recirculation due to dominant winds, the installation where all chillers are aligned to the dominant wind is preferred (see figure below).

***Multiple chiller installed side by side in a compound.***
In case of compounds with walls of the same height of the chillers or higher, the installation is not recommended.
Chiller 2 and chiller 3 work with sensible higher temperature due to the enhanced recirculation. In this case special precautions must be taken into account according to the specific installation (eg: louvered walls, install the unit on base frame in order to increase the height, ducts on the discharge of the fans, high lift fans, etc).
All the above cases are even more sensitive especially when design conditions are close to the limits of the unit operating envelope.

NOTE: Daikin cannot be considered responsible in case of malfunctions generated by hot air recirculation or insufficient airflow as result of improper installation if the above recommendations are ignored.

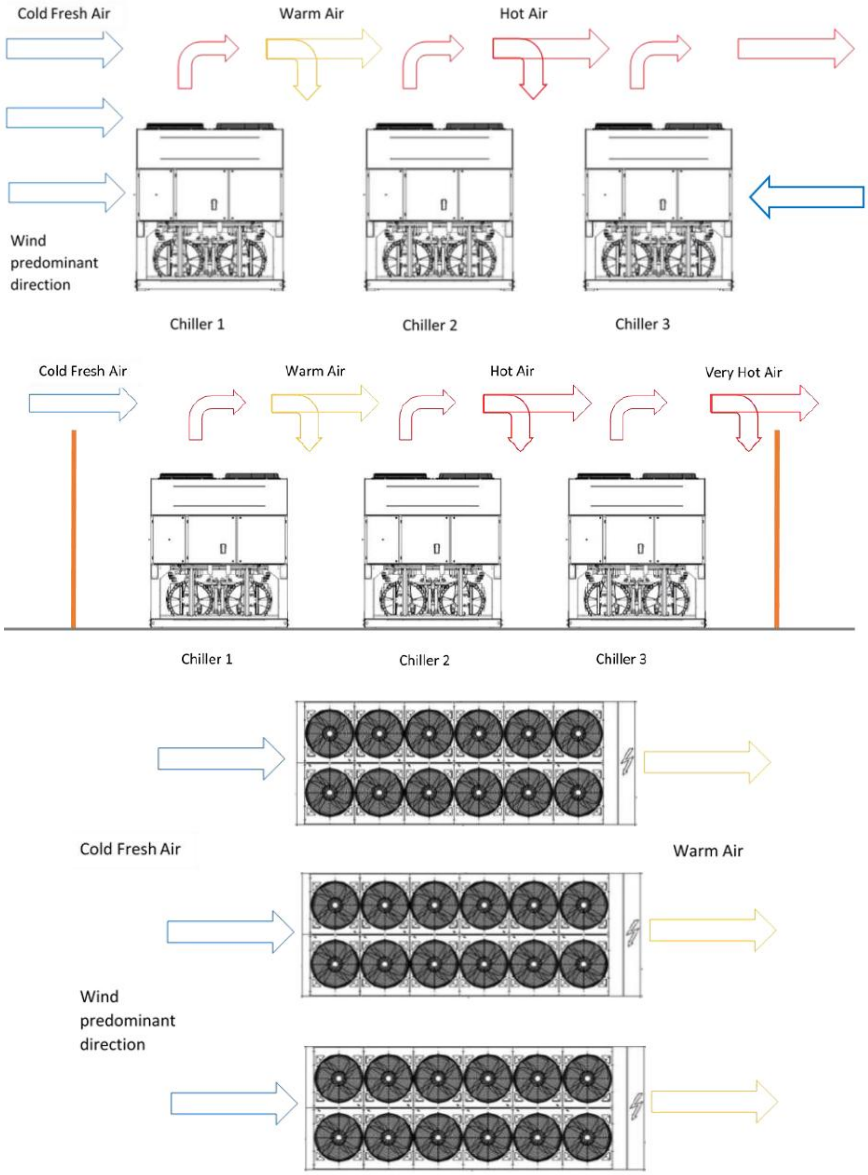


***Fig. 17– Multiple Chiller Installation***

## 4.6 Water circuit for unit connection

### 4.6.1 Water piping

Piping must be designed with the lowest number of elbows and the lowest number of vertical changes of direction. In this way, installation costs are reduced and system performance is improved.

Water system must have:

- Anti-vibration mountings in order to reduce transmission of vibrations to thewhole structure.
- Isolating valves to isolate the unit from the water system during maintenance.
- In order to protect the chiller, the evaporator must be protected against freezing by continuous monitoring of the water flow in the evaporator itself by a flow switch. In most cases, on site, the flow switch is set to generate an alarm only when the water pump turns off and the water flow drops to zero. It is recommended to adjust the flow switch to produce a "Water Leakage Alarm" when the water flow reaches 50% of the nominal value; in this case the evaporator is protected against freezing and the flow switch can detect the clogging of the water filter.
- A manual or automatic air venting device at the system's highest point and a drain device at the system's lowest point.
- Neither the evaporator nor the heat recovery device must be positioned at the system's highest point.
- A suitable device that can maintain the water system under pressure (expansion tank, etc.).
- Water temperature and pressure indicators to assist the operator during service and maintenance.
- A filter or any device that can remove particles from the fluid. The use of a filter extends the life of the evaporator and pump and helps to keep the water system in a better condition. **The water filter must be installed as close as possible to the chiller**. If the water filter is installed in another part of the water system, the Installer must guarantee the cleaning of the water pipes between the water filter and the evaporator. If the unit is provided with hydronic freecooling system, an **additional** filter is installed by factory on the water manifold before the MCH coils to prevent clogging. However a water filter at the head of the circuit is always mandatory.
  Recommended maximum opening for strainer mesh is:
  - 1.0 mm (BPHE)
  - 0.87 mm (DX S&T)
  - 1.2 mm (Flooded)
- Evaporator with an electrical heater controlled by the unit logic that ensures protection against water freezing at water temperatures lower than antifreeze setpoint.
  All the other water piping/devices outside the unit must therefore be protected against freezing.
- The heat recovery device must be emptied of water during the winter season, unless an ethylene glycol mixture in appropriate percentage is added to the water circuit.
- If case of unit replacement, the entire water system must be emptied and cleaned before the new unit is installed. Regular tests and proper chemical treatment of water are recommended before starting up the new unit.
- If glycol is added to the water system as anti-freeze protection, pay attention to the fact that suction pressure will be lower, the unit's performance will be lower and water pressure drops will be higher. All unit-protection systems, such as anti-freeze, and low-pressure protection will need to be readjusted.
- Before insulating water piping, check that there are no leaks. The complete hydraulic circuit must be insulated to prevent condensation and reduced refrigeration capacity. Protect the water pipes from frost during winter (using for example a glycol solution or a heating cable).
- Check that the water pressure does not exceed the design pressure of the water side heat exchangers. Install a safety valve on the water pipe downstream of the evaporator.

### 4.6.3 Flow switch option installation

To ensure sufficient water flow through the evaporator, it is necessary to install a flowswitch on water circuit. The flow switch can be installed either on the inlet or outlet water piping. The purpose of the flow switch is to stop the unit in case of water flow interruption, thus protecting the evaporator from freezing.
The manufacturer offers, as optional, a flow switch that has been selected for this purpose.
This paddle-type flow switch is suitable for heavy-duty outdoor applications (IP67) and pipe diameters from 1" to 8".
The flow switch is provided with a clean contact which must be electrically connected to terminals shown in the wiring diagram. The flow switch must be set up to intervene when the water flow of the evaporator reaches 50% of the nominal value.

### 4.6.2 Heat recovery option

Units may be optionally equipped with heat recovery system.
This system in made by a water cooled heat exchanger located on the compressors discharge pipe and a dedicated management of condensing pressure.
To guarantee compressor operation within its envelope, units with heat recovery cannot operate with water temperature of the heat recovery water lower than 28°C.
It is a responsibility of plant designer and chiller installer to guarantee the respect of this value (e.g. using recirculating bypass valve).

## 4.7 Water treatment

Before starting unit operation, clean the water circuit.
The evaporator must not be exposed to flushing velocities or debris released during flushing. It is recommended that a suitable sized bypass and valve arrangement is installed to allow flushing of the piping system. The bypass can be used during maintenance to isolate the heat exchanger without disrupting flow to other units.
**Any damage due to the presence of foreign bodies or debris in the evaporator will not be covered by warranty**.
Dirt, scales, corrosion debris and other material can accumulate inside the heat exchanger reducing heat exchange. Pressure drop can increase as well, thus reducing water flow. Proper water treatment therefore reduces the risk of corrosion, erosion, scaling, etc.. The most appropriate water treatment must be determined locally, according to the type of system and water characteristics.
The manufacturer is not responsible for damage to or malfunctioning of equipment caused by failure to treat water or by improperly treated water.

***Table 11 – Acceptable water quality limits***

| DAE Water quality requirements | Shell&tube + Flooded | BPHE |
|---|---|---|
| pH (25°C) | 6.8 – 8.4 | 7.5-9.0 |
| Electrical conductivity (25°C) | < 2000 µS/cm | <500 µS/cm |
| Chloride ion | < 150 mg $Cl^-$/l | |
| Chlorine molecular | < 5 mg Cl2/l | <1.0mg Cl2/l |
| Sulphate ion ($SO_4^{--}$/l) | < 100 mg $SO_4^{--}$/l | <100 mg $SO_4^{--}$/l |
| Alkalinity | < 200 mg $CaCO_3$/l | <100 mg $CaCO_3$/l |
| Total Hardness | 130-300 mg $CaCO_3$/l | 80-150 mg $CaCO_3$/l |
| Iron | < 5.0 mg Fe/l | |
| Copper | < 1.0 mg Cu/l | |
| Ammonium ion (NH3) | < 1.0 mg $NH_4^+$/l | <0.5mg $NH_4^+$/l |
| Silica | 50 mg $SiO_2$/l | |
| Dissolved Oxygen | < 8 mg/l | |
| Total dissolved solids | < 1500 mg/l | |
| Hydrogen carbonate (HCO---) | | 60-200 mg HCO3/l |
| (HCO---)/(SO4--) | | >0.5 |
| (Ca+Mg)/(HCO---) | | >1.6 |

## 4.8 Evaporator and heat recovery exchangers anti-freeze protection

All evaporators are supplied with a thermostatically controlled anti-freeze electrical resistance, which provides the correct anti-freeze protection at temperatures lower than –16°C.
However, unless the heat exchangers are completely empty and cleaned with anti-freeze solution, additional methods must also be used against freezing.
Two or more of below protection methods shall be considered when designing the system as a whole:

- Continuous water flow circulation inside piping and exchangers
- Addition of an appropriate amount of glycol inside the water circuit
- Additional heat insulation and heating of exposed piping
- Emptying and cleaning of the heat exchanger during the winter season

***It is responsibility of the installer and/or of local maintenance personnel to ensure that described anti-freeze methods are used.***

***Make sure that appropriate anti-freeze protection is maintained at all times.***

***Failing to follow the instructions above could result in unit damage. Damage caused by freezing is not covered by the warranty.***

# 5 ELECTRICAL INSTALLATION

## 5.1 General specifications

Refer to the specific wiring diagram of the unit which has been purchased. Should the wiring diagram not be on the unit or should it have been lost, please contact your manufacturer representative, who will send you a copy.
In case of discrepance between wiring diagram and electrical panel/cables, please contact the manufacturer representative.

***All electrical connections to the unit must be carried out in compliance with laws and regulations in force.***
***All installation, management and maintenance activities must be carried out by qualified personnel. There is a risk of electric shock.***

This unit includes non-linear loads such as inverters, which have a natural current leakage to earth. If an Earth Leakage Detector is installed upstream the unit, a type B device with a minimum threshold of 300 mA must be used.

***Before any installation and connection work, the unit must be switched off and secured. Since this unit includes inverters, the intermediate circuit of the capacitors remains charged with high voltage for a short period of time after being switched off.***
***Do not operate to the unit before 20 minutes after the unit has been switched off.***

Electrical equipment is capable of operating correctly in the intended ambient air temperature. For very hot environments and for cold environments, additional measures are recommended (contact the manufacturer representative).
The electrical equipment is capable of operating correctly when the relative humidity does not exceed 50 % at a maximum temperature of +40 °C. Higher relative humidities are permitted at lower temperatures (for example 90% at 20 °C). Harmful effects of occasional condensation shall be avoided by design of the equipment or, where necessary, by additional measures (contact the manufacturer representative).
This product complies with EMC standards for industrial environments. Therefore it is not intended for use in residential areas, e.g. installations where the product is connected to a low voltage public distribution system. Should this product need to be connected to a low voltage public distribution system, specific additional measures will have to be taken to avoid interference with other sensitive equipment.

## 5.2 Electrical supply

The electrical equipment can operate correctly with the conditions specificed below:

| | |
|---|---|
| **Voltage** | Steady state voltage: 0,9 to 1,1 of nominal voltage |
| **Frequency** | 0,99 to 1,01 of nominal frequency continuosly<br>0,98 to 1,02 short time |
| **Armonics** | Harmonic distortion not exceeding 10 % of the total r.m.s. voltage between live conductors for the sum of the 2nd through to the 5$^{th}$ harmonic. An additional 2 % of the total r.m.s. voltage between live conductors for the sum of the 6th through to the 30th harmonic is permissible. |
| **Voltage unbalance** | Neither the voltage of the negative sequence component nor the voltage of the zero sequence component in three-phase supplies exceeding 3 % of the positive sequence component |
| **Voltage interruption** | Supply interrupted or at zero voltage for not more than 3 ms at any random time in the supply cycle with more than 1 s between successive interruptions. |
| **Voltage dips** | Voltage dips not exceeding 20% of the peak voltage of the supply for more than one cycle with more than 1 s between successive dips. |

## 5.3 Electric connections

Provide an electrical circuit to connect the unit. It must be connected to the copper cables with an adequate section relative to the plate absorption values and according to the current electrical standards.
Daikin Applied Europe S.p.A. declines all responsibility for an inadequate electrical connection.

***Connections to the terminals must be made with copper terminals and cables, otherwise overheating or corrosion may occur at the connection points with the risk of damaging the unit. The electrical connection must be carried out by qualified personnel, in compliance with the laws in force. There is a risk of electric shock.***

To avoid interference, all control wires must be connected separately from the power cables. Use different electrical passage ducts for this purpose.

Particular care must be taken when realizing wire connections to the switchbox; if not properly sealed, cable entries may allow ingress of water into the switchbox which may cause damage to the equipment inside.
The power supply to the unit must be set up in such a way that it can be switched on or off independently from that of other system components and other equipment in general, by means of a general switch.
The electrical connection of the panel must be carried out maintaining the correct sequence of the phases.

***Do not apply torque, tension or weight to the main switch terminals. Power line cables must be supported by appropriate systems.***

Simultaneous single and three-phase loads and phase unbalance can cause ground losses of up to 150 mA during normal unit operation. The unit includes devices that generate higher harmonics, such as an inverter, that can increase ground losses to much higher values, about 2 A.
The protections for the power supply system must be designed according to the values mentioned above.
A fuse must be present on each phase and, where provided for by the national laws of the country of installation, a leak detector to earth.
Make sure that the short-circuit current of the system at the installation point is less then the rated short-time withstand current ($I_{cw}$); the value of Icw is indicated inside the electrical panel.
The standard equipment has to be use in TN-S earthing system; if your system is different please contact the manufacturer representative.

***Before any electrical connection work to the compressor motor and / or the fans, make sure that the system is switched off and the main switch of the unit is open. Failure to observe this rule could result in serious personal injury.***

## 5.4 Cable requirements

The cables connected to the circuit breaker must respect the insulation distance in the air and the surface isolation distance between the active conductors and the earth, according to IEC 61439-1 table 1 and 2, and to the local national laws. The cables connected to the main switch must be tightened using a pair of keys and respecting the unified clamping values, relative to the quality of the screws of the washers and nuts used.
**Connect the earth conductor (yellow / green) to the PE ground terminal**.
The equipotential protection conductor (earth conductor) must have a section according to table 1 of EN 60204-1 Point 5.2, shown below.

***Table 12 - Table 1 of EN60204-1 Point 5.2***

| **Section of the copper phase conductors feeding the equipment** *S* [mm²] | **Minimum cross-section of the external copper protection conductor** *S*p [mm²] |
|---|---|
| *S* ≤ 16 | *S* |
| 16 < *S* ≤ 35 | 16 |
| *S* > 35 | *S*/2 |

In any case, the equipotential protection conductor (earth conductor) must have a cross section of at least 10 mm 2, in accordance with point 8.2.8 of the same standard.

## 5.5 Phase unbalance

In a three-phase system, the excessive imbalance between the phases is the cause of the engine overheating. The maximum permitted voltage unbalance is 3%, calculated as follows:

$$Unbalance\ \% = \frac{(Vx - Vm) * 100}{Vm}$$

where:

Vx = phase with greater unbalance

Vm = average of the tensions

Example: the three phases measure 383, 386 and 392 V respectively. The average is:

$$\frac{383 + 386 + 392}{3} = 387\ V$$

The unbalance percentage is:

$$\frac{(392 - 387) * 100}{387} = \mathbf{1.29}\ \%$$

less than the maximum allowed (3%).

## 5.6 LHS panel specifications

LHS PANEL is an option on the standard VFD PANEL for all TZ-D / MZ-D machines, so as to meet TDDI<5%.
It is provided with an internal Shunt Active Filter that monitors the supply current including any distortion. From this signal the control system reacts producing same current harmonics with opposite sign cancelling out distortions on current from the grid.
The Series cover the ranges from 90kW to 800kW (electrical power) with single or double VFD.

Control and status of the VFD can be done via digital and analogue I/O, serial bus communication alone or a combination of both. The serial connection using Modbus (RTU) via RS485 using VFD Nav (Software) gives access to more detailed information about the VFD.

### 5.6.1 Product Identification

The VFD LHS is identified by its label, which contains the following information:

- Recognized company Trademark
- Type: Inverter Model
- Serial Number
- Application Software
- Production Date
- Nominal Ratings

***Fig. 18– VFD LHS Identification Label***

The Electrical Panel is identified by its label too, which contains the following information:

- Recognized company Trademark
- Panel Model
- Hata Code
- Sales Order Number
- S/N panel
- S/N VFD LH-S
- Power Supply
- Rated input current
- Weight
- Year
- Reference standards

***Fig. 19 - Electrical Panel identification Label***

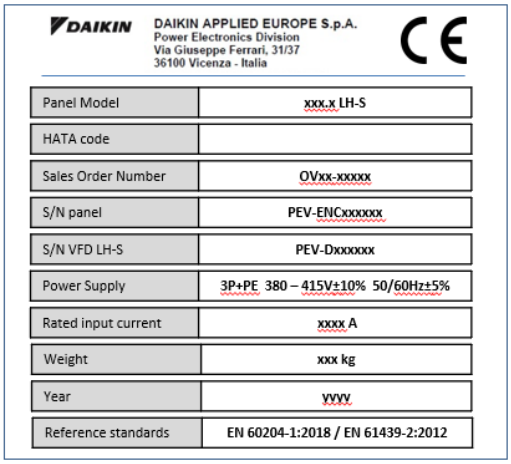


| | |
|---|---|
| Panel Model | xxx.x LH-S |
| HATA code | |
| Sales Order Number | OVxx-xxxxx |
| S/N panel | PEV-ENCxxxxxx |
| S/N VFD LH-S | PEV-Dxxxxxx |
| Power Supply | 3P+PE 380 – 415V±10% 50/60Hz±5% |
| Rated input current | xxxx A |
| Weight | xxx kg |
| Year | yyyy |
| Reference standards | EN 60204-1:2018 / EN 61439-2:2012 |

### 5.6.2 Directives and Standards

The product is designed according to the following directives.

- 2014/35/EU Low Voltage Directive (LVD)
- 2014/30/UE Electromagnetic Compatibility (EMC)
- DIRECTIVE 2011/65/EU RoHS II

Since this product is sold only as a sub-assembly of a chiller, it is out of the scope of Machinery Directive (2006/42/EC).

The product has been tested according to the following standards.

- EN 60204-1:2018 Safety of machinery - Electrical equipment of machines - Part 1: General requirements.
- EN 61439-1:2011 Low-voltage switchgear and controlgear assemblies - Part 1: General rules.
- EN 61439-2:2011 Low-voltage switchgear and controlgear assemblies - Part 2: Power switchgear and controlgear assemblies.
- EN61000-6-2:2019 Generic EMC Immunity. Industrial environments.
- EN61000-6-4:2019 Generic EMC Emission. Industrial environments.

### 5.6.3 Panel Terminals

The input cable size is determined by the size of the machine (Chiller). Please refer to the databook informations.
The output terminals are factory connected to the compressor.

***Permitted material for conductors: Copper.***

### 5.6.4 Piping Connections

Cooling of the LHS VFDs is achieved using the refrigerant expanded liquid processed by the Chiller.
Refrigerant taken from the liquid line and released to the suction line of the machine, flows through input (IN) and output (OUT) copper pipes connected to the back of the LHS Panel. (See Fig.1)

If inverter panel disconnection is needed it is necessary to avoid that pressure is in these tubes before their removal.
To safely disconnect this line, follow the following steps.

- Close the highlighted valves (1 in Fig. 17).
- Extract the refrigerant from the access fittings (2a in Fig. 17) and measure the pressure. Be sure that there is zero pressure in the lines before proceeding with panel removal.
- Now it is possible to remove the piping from the inverter panel.

Verify that pressure difference between access fitting 2a and access fitting 2b is lower than 2 bar, otherwise provide to filter replacement.

***Failure to remove all refrigerant pressure from the whole refrigerant line can result in the pressure ejection of components during disassembly operation and cause personal injury.***

***Any work on refrigerant lines has to be carried out only by trained technicians, please refer to DAIKIN representative.***

## 5.7 Maintenance

The maintenance of the product includes the interventions (inspection, verification, control, adjustment and replacement) that are necessary following normal use.
For a good maintenance:

- Use only original spare parts, tools suitable for the purpose and in good condition.
- Comply with the intervention frequencies indicated in the manual for scheduled maintenance (preventive and periodic). The distance (indicated in time or in work cycles) between one intervention and the other is to be understood as maximum acceptable; therefore, it must not be exceeded; it can be abbreviated instead.
- Good preventive maintenance requires constant attention and continuous monitoring. To verify promptly the cause of any anomalies such as excessive noise, overheating, etc. .... and remedy them.
- A timely removal of any causes of anomaly or malfunction avoids further damage to the equipment and ensures operator safety.

The staff in charge of maintenance must be well trained and must have a thorough background knowledge of accident prevention regulations; unauthorized personnel must remain outside the work area during operations. Even cleaning activities are carried out only and exclusively during maintenance and with the product de-energized.
The product maintenance operations are divided, from the operational point of view, into two main categories:

| | |
|---|---|
| **Ordinary Maintenance** | All those operations that the maintenance operator must carry out, in a preventive manner, to guarantee the proper functioning over time; the Ordinary Maintenance includes inspection, control, adjustment, cleaning and lubrication. |
| **Extraordinary Maintenance** | All those operations the maintenance technician must carry out when the product needs it. Extraordinary Maintenance includes the activities of revision, repair, restoration of nominal or working conditions, replacement of a faulty, defective or worn unit. |

### 5.7.1 Ordinary Maintenance

Ordinary Maintenance includes inspections, checks and interventions that keep an eye on:

- General conditions of the product;
- Power sources (electric);
- Product cleaning.

The following table lists a series of checks and interventions to be performed and a recommended timing. The periodicity of the ordinary maintenance operations indicated refer to normal operating conditions, that is to say responding to the conditions of use envisaged.

***Table 13– Ordinary Maintenance Frequency***

| OPERATION | FREQUENCY | | | | | |
|---|---|---|---|---|---|---|
| | Daily | Weekly | Monthly | Half yearly | Yearly | 5 years |
| Bolts tightening control | | | | X | | |
| Visual inspection of the general condition of the product | | | | X | | |
| Filters check | | | | X | | |
| Filters and Fans cleaning | | | | | X | |

Filters and fans need to be cleaned using vacuum cleaner or compressed air if they become visibly dirty. Inlet filters could require a higher level of maintenance in places with high level of dust exposure.
Also consider replacement of the filters when they are worn or excessively dirty.

### 5.7.2 Extraordinary Maintenance

Any request for extraordinary maintenance must be sent to the manufacturer Daikin Applied Europe S.p.A., who will decide how to proceed. It is recommended not to intervene independently, if the intervention falls outside what is reported in routine maintenance.

## 5.8 VFD LHS communication

### 5.8.1 Modbus RTU Configuration

***Table 14– Modbus RTU Configuration***

| | |
|---|---|
| **Protocol** | Modbus – RTU |
| **Address** | User defined. Default is 10. |
| **Modbus Rate** | 19200 kbps |
| **Parity** | No |
| **Stop Bits** | 1 |

**All VFD's come from factory with a default address set to 10.**

## 6 OPERATOR'S RESPONSIBILITIES

It is essential that the operator is appropriately trained and becomes familiar with the system before operating the unit. In addition to reading this manual, the operator must study the microprocessor operating manual and the wiring diagram to understand start-up sequence, operation, shutdown sequence and operation of all the safety devices.
During the unit initial start-up phase, a technician authorized by the manufacturer is available to answer any questions and to give instructions as to the correct operating procedures.
The operator must keep a record of operating data for every installed unit. Another registration must also be kept for all the periodic maintenance and assistance activities.
If the operator notes abnormal or unusual operating conditions, he is advised to consult the technical service authorized by the manufacturer.

***If the unit is switched off, the compressor heating resistors cannot be used. Once the unit is reconnected to the mains, leave the compressor heating resistors charged for at least 12 hours before restarting the unit.***
***Failure to observe this rule may cause damage to the compressors due to excessive accumulation of liquid inside them.***

This unit represents a substantial investment and deserves the attention and care to keep this equipment in good working order.
However, during operation and maintenance it is essential to observe the following instructions:

- do not allow unauthorized and / or unqualified personnel to access the unit.
- it is forbidden to access the electrical components without having opened the unit main switch and switched off the power supply.
- it is forbidden to access the electrical components without using an insulating platform. Do not access the electrical components if water and/or moisture are present.
- verify that all operations on the refrigerant circuit and on the components under pressure are carried out exclusively by qualified personnel.
- the replacement of the compressors must be carried out exclusively by qualified personnel.
- sharp edges and the surface of the condenser section could cause injury. Avoid direct contact and use adequate protection device.
- do not introduce solid objects into the water pipes while the unit is connected to the system.
- it is absolutely forbidden to remove all protections of moving parts.

In case of sudden stop of the unit, follow the instructions on the Control Panel Operating Manual which is part of the on-board documentation delivered to the end user.
It is strongly recommended to perform installation and maintenance with other people.

In case of accidental injury or unease, it is necessary to:

- keep calm.
- press the alarm button if present in the installation site.
- contact immediately emergency rescue personnel of the building or the Health Emergency Service.
- wait for the operators to arrive without leaving the injured person alone.
- give all necessary information to the rescue operators.

***Avoid installing the chiller in areas that could be dangerous during maintenance operations, such as platforms without parapets or railings or areas not complying with the clearance requirements around the chiller.***

# 7 MAINTENANCE

**This chiller must be maintained by qualified technicians. Before beginning any work on the system, the personnel shall assure that all security precautions have been taken.**
Personel working on the electrical or the refrigeration components must be authorized, trained and fully qualified. Maintenance and repair requiring the assistance of other skilled personnel should be carried out under the supervision of the person competent in the use of flammable refrigerants. Any person conducting servicing or maintenance on a system or associated parts of the equipment should be competent according to EN 13313.
**People working on refrigerating systems with flammable refrigerants should have know-how of safety aspects of flammable refrigerant handling, supported by evidence of appropriate training.**
Always protect the operating personnel with personal protective equipment appropriate for the tasks to be performed. Common individual devices are: helmet, goggles, gloves, caps, safety shoes. Additional individual and group protective equipment should be adopted after an adequate analysis of the specific risks in the area of relevance, according to the activities to be performed.

***Table 15 – General maintenance table***

| | |
|---|---|
| **Electrical components** | Never work on any electrical components until the general supply to the unit has been cut using the disconnect switch(es) in the control box. The frequency variators are equipped with capacitor batteries with a discharge time of 20 minutes; after disconnecting power, wait 20 minutes before opening the control box. |
| **Refrigerating system** | Following precautions should be taken before working on the refrigerant circuit:<br>— Obtain permit for hot work (if required);<br>— Ensure that no flammable materials are stored in the work area and that no ignition sources are present anywhere in the work area;<br>— Ensure that suitable fire extinguishing equipment is available;<br>— Ensure that the work area is **properly ventilated** before working on the refrigerant circuit or before welding, brazing or soldering work;<br>— Ensure that the leak detection equipment being used is non-sparking, adequately sealed or intrinsically safe;<br>— Ensure that all maintenance staff have been instructed.<br>The following procedure should be followed before working on the refrigerant circuit:<br>1. Remove refrigerant (specify the residual pressure);<br>2. Purge circuit with **inert gas** (e.g. nitrogen);<br>3. evacuate to a pressure of 0,3 (abs.) bar (or 0,03 MPa);<br>4. Purge again with **inert gas** (e.g. nitrogen);<br>5. Open the circuit<br>The area should be checked with an appropriate refrigerant detector prior to and during any hot work to make the technician aware of a potentially flammable atmosphere.<br>If compressors or compressor oils are to be removed, it should be ensured that it has been evacuated to an acceptable level to ensure that there is no flammable refrigerant remaining within the lubricant.<br>**Only refrigerant recovery equipment designed for use with flammable refrigerants should be employed.**<br>If the national rules or regulations permit the refrigerant to be drained, this should be done safely, using a hose, for example, through which the refrigerant is discharged into the outside atmosphere in a safe area. It should be ensured that an inflammable explosive refrigerant concentration cannot occur in the vicinity of an ignition source or penetrate into a building under any circumstance.<br>In the case of refrigerating systems with an indirect system, the heat-transfer fluid should be checked for the possible presence of refrigerant.<br>After any repair work, the safety devices, for example refrigerant detectors and mechanical ventilation systems, should be checked and the results recorded.<br>It should be ensured that any missing or illegible label on components of the refrigerant circuit is replaced.<br>Sources of ignition should not be used when searching for a refrigerant leak. |

**Refer to par. 7.2.1 for further details about MCH coils mainteneance and cleaning procedure.**

## 7.1 Routine maintenance

This chiller must be maintained by qualified technicians. Before beginning any work on the system the personnel shall assure that all security precautions have been taken.
Neglecting unit maintenance, could degrade all parts of the units (coils, compressors, frames, pipes, etc..) with negative effect on performances and functionality.

There are two different levels of maintenance, which can be chosen according to the type of application (critical/non critical) or to the installation environment (highly aggressive or not).
Examples of critical applications are process cooling, data centres, etc.

Highly Aggressive Environments can be defined as the follows:

- Industrial environment (with possible concentration of fumes result of combustion and chemical process)
- Costal environment
- Highly polluted urban environment
- Rural environment close to of animal excrement and fertilizers, and high concentration of exhaust gas from diesel generators
- Desert areas with risk of sandstorms
- Combinations of the above

Unit exposed to a highly aggressive environment can face corrosion in a shorter time than ones installed on a standard environment. Corrosion causes a rapid rusting of the frame core, consequently, decreases unit structure life time. To avoid that, it is necessary to wash periodically the frame surfaces with water and suitable detergents.
In case of part of unit frame paint came off, it is important to stop its progressive deterioration by repainting the exposed parts using proper products. Please contact factory to get the required products specifications.
In case of just salt deposits are present, it is enough to rinse the parts with fresh water.

**Table 19 lists all Maintenance activities for standard applications and standard environment.**
**Table 20 lists all Maintenance activities for critical applications or highly aggressive environment.**
Following below instructions is mandatory for cases listed above, but also advised for units installed in standard environments.

*Table 16 – Standard Routine Maintenance Plan*

| List of activities | Weekly | Monthly (Note 1) | Semiannual | Yearly /Seasonal (Note 2) |
|---|---|---|---|---|
| **General:** | | | | |
| Reading operating data (Note 3) | X | | | |
| Visual inspection of unit for any damage and/or loosening | | X | | |
| Verification of thermal insulation integrity | | | | X |
| Clean and paint where necessary | | | | X |
| Water analysis (Note 6) | | | | X |
| Check of flow switch operation | | X | | |
| **Electrical:** | | | | |
| Verification of control sequence | | | | X |
| Verify contactor wear – Replace if necessary | | | | X |
| Verify that all electrical terminals are tight – Tighten if necessary | | | | X |
| Clean inside the electrical control board | | | | X |
| Visual inspection of components for any signs of overheating | | X | | |
| Verify operation of compressor and oil heater | | X | | |
| Measure compressor motor insulation using the Megger | | | | X |
| Clean air intake filters of the electrical panel | | X | | |
| Verify operation of all ventilation fans in the electrical panel | | | | X |
| Verify operation of inverter cooling valve and heater | | | | X |
| Verify status of capacitors in the inverter (signs of damage, leaks, etc) | | | | X |
| **Refrigeration circuit:** | | | | |
| Check for any refrigerant leakage | | X | | |
| Verify refrigerant flow using the liquid sight glass – Sight glass full | X | | | |
| Verify filter dryer pressure drop | | X | | |
| Verify oil filter pressure drop (Note 5) | | X | | |
| Analyse compressor vibrations | | | | X |
| Analyse compressor oil acidity (Note 7) | | | | X |
| Check security valves (Note 8) | | X | | |
| Check and application of additional protective paint layer(Note 11) | | | X | |
| **Condenser section:** | | | | |
| Clean water rinse condenser coils (Note 4 and 9) | | | | X |
| Verify that fans are well tightened | | | | X |
| Verify condenser coil fins condenser coil fins / hydronic freecooling coils fins - Remove / Comb if necessary | | | | X |
| Check expansion tank pre-charge (glycol free units) (Note10) | | X | | |
| Check expansion tank membrane conditions (glycol free units) | | | | X |
| Check the aspect of the plastic protection of the copper/aluminum connection | | X | | |
| **Evaporator/Heat Recovey:** | | | | |
| Check the cleaning of the Evaporator/BPHE (Note 9) | | | | X |

**Notes**:

1. Monthly activities include all the weekly ones.
2. The annual (or early season) activities include all weekly and monthly activities.
3. Unit operating values should be read on a daily basis thus keeping high observation standards.
4. In environments with a high concentration of air-borne particles, it might be necessary to clean the condenser coils more often.
5. Replace the oil filter when the pressure drop across it reaches 2.0 bar.
6. Check for any dissolved metals.
7. TAN (Total Acid Number) : ≤0,10 : No action
   Between 0.10 and 0.19 : Replace anti-acid filters and re-check after 1000 running hours. Continue to replace filters until the TAN is lower than 0.10.
   >0,19 : Replace oil, oil filter and filter dryer. Verify at regular intervals
8. Check that the cap and the seal have not been tampered with. Check that the drainage connection of the safety valves is not accidentally occluded by foreign objects, rust or ice. Check the manufacturing date on the safety valve and replace it, if necessary, in compliance with the national laws in force.
9. Clean condenser banks with clean water and water heat exchangers with appropriate chemicals. Particles and fibers could clog up the exchangers, especially for water exchangers pay attention if water rich in calcium carbonate is used. An increase in pressure drops or a decrease in thermal efficiency means that the heat exchangers are clogged. In environments with a high concentration of air-borne particles, it might be necessary to clean the condenser bank more often.
10. Expansion vessel pre-charge is around 1.5 barg (± 20% tolerance is acceptable). It is necessary to check this value every 6 months. To do so, use a manometer, connecting it at the valve on the vessel itself. It is necessary to check the pressure pre-charge also every time the unit is off for more than a month.
11. The protective paint layer must be applied on:all brazing and joints of copper refrigerant pipes; drier filter plate; Rotalock valves and flanges of refrigerant circuit; all BPHE not insulated; anti-chattering capillars.

*Table 17 – Routine Maintenance Plan for Critical Application and/or Highly Aggressive Environment*

| List of activities (Note 8) | Weekly | Montly (Note 1) | Semiannual | Yearly/ Seasonal (Note 2) |
|---|---|---|---|---|
| **General:** | | | | |
| Reading operating data (Note 3) | X | | | |
| Visual inspection of unit for any damage and/or loosening | | X | | |
| Verification of thermal insulation integrity | | | | X |
| Cleaning | | X | | |
| Paint where necessary | | | | X |
| Water analysis (Note 6) | | | | X |
| Check of flow switch operation | | X | | |
| **Electrical:** | | | | |
| Verification of control sequence | | | | X |
| Verify contactor wear – Replace if necessary | | | | X |
| Verify that all electrical terminals are tight – Tighten if necessary | | | | X |
| Clean inside the electrical control board | | X | | |
| Visual inspection of components for any signs of overheating | | X | | |
| Verify operation of compressor and oil heater | | X | | |
| Measure compressor motor insulation using the Megger | | | | X |
| Clean air intake filters of the electrical panel | | X | | |
| Verify operation of all ventilation fans in the electrical panel | | | | X |
| Verify operation of inverter cooling valve and heater | | | | X |
| Verify status of capacitors in the inverter (signs of damage, leaks, etc) | | | | X |
| **Refrigeration circuit:** | | | | |
| Check for any refrigerant leakage | | X | | |
| Verify refrigerant flow using the liquid sight glass – Sight glass full | X | | | |
| Verify filter dryer pressure drop | | X | | |
| Verify oil filter pressure drop (Note 5) | | X | | |
| Analyse compressor vibrations | | | | X |
| Analyse compressor oil acidity (Note 7) | | | | X |
| Check the security valve (Note 8) | | X | | |
| Check expansion tank pre-charge (glycol free units) (10) | | X | | |
| Check expansion tank membrane conditions (glycol free units) | | | | X |
| Check and application of additional protective paint layer(Note 11) | | | X | |
| **Condenser section:** | | | | |
| Clean water rinse condenser coils (Note 4) | | X | | |
| Quarterly clean condenser coils (E-coated only) | | | | X |
| Verify that fans are well tightened | | | | X |
| Verify condenser coil fins – Comb if necessary | | X | | |
| Check the aspect of the plastic protection of the copper/aluminum connection | | X | | |

**Notes**:

1. Monthly activities include all the weekly ones.
2. The annual (or early season) activities include all weekly and monthly activities.
3. Unit operating values should be read on a daily basis thus keeping high observation standards.
4. In environments with a high concentration of air-borne particles, it might be necessary to clean the condenser coils more often.
5. Replace the oil filter when the pressure drop across it reaches 2.0 bar.
6. Check for any dissolved metals.
7. TAN (Total Acid Number) : ≤0,10 : No action
   Between 0.10 and 0.19 : Replace anti-acid filters and re-check after 1000 running hours. Continue to replace filters until the TAN is lower than 0.10.
   >0,19 : Replace oil, oil filter and filter dryer. Verify at regular intervals
8. Check that the cap and the seal have not been tampered with. Check that the drainage connection of the safety valves is not accidentally occluded by foreign objects, rust or ice. Check the manufacturing date on the safety valve and replace it, if necessary, in compliance with the national laws in force.
9. Clean condenser banks with clean water and water heat exchangers with appropriate chemicals. Particles and fibers could clog up the exchangers, especially for water exchangers pay attention if water rich in calcium carbonate is used. An increase in pressure drops or a decrease in thermal efficiency means that the heat exchangers are clogged. In environments with a high concentration of air-borne particles, it might be necessary to clean the condenser bank more often.
10. Expansion vessel pre-charge is around 1.5 barg (± 20% tolerance is acceptable). It is necessary to check this value every 6 months. To do so, use a manometer, connecting it at the valve on the vessel itself. It is necessary to check the pressure pre-charge also every time the unit is off for more than a month.
11. The protective paint layer must be applied on:all brazing and joints of copper refrigerant pipes; drier filter plate; Rotalock valves and flanges of refrigerant circuit; all BPHE not insulated; anti-chattering capillars.

## 7.2 Unit Maintenance and cleaning

Unit exposed to a highly aggressive environment can face corrosion in a shorter time than ones installed on a standard environment. Corrosion causes a rapid rusting of the frame core, consequently decreases unit structure life time. To avoid that, it is necessary to wash periodically the frame surfaces with water and suitable detergents.
In case of part of unit frame paint came off, it is important to stop its progressive deterioration by repainting the exposed parts using proper products. Please contact factory to get the required products specifications.
Note: in case of just salt deposits are present, it is enough to rinse the parts with fresh water.

***Shut-off valves must be turned at least once a year in order to preserve their function.***

### 7.2.1 Microchannel Coil maintenance

The operating environment of the units can affect life of MCH coils (made with aluminium material) both of condensing and of free cooling section. In order to mantain the efficiency of the unit over time and its duration, it is necessary to do a frequent cleaning of MCH coils.
As opposed to fin and tube heat exchangers, MCH coils are more likely to accumulate dirt on the surface. Dust, pollution, etc...can create obstructions. These obstructions can be removed by washing periodically under pressure.

The following maintenance and cleaning procedures are recommended as part of the routine maintenance activities. Before operating:

1. Disconnect the unit from power supply.
2. Wait for the fans to stop completely;
3. Make sure that the fan blades cannot move for any reason (for example: wind).
4. If present, remove the ”V” shaped panels.
5. Remove free cooling coils.
6. Before using a water jet on coils, remove bigger dirt, such as leaves and fibres, with a vacuum cleaner (preferably with a brush or other soft attachment rather than a metal tube), compressed air blown from the inside out (if possible), and/or a soft bristle (not wire!) brush. Do not impact or scrape the coil with the vacuum tube, air nozzle, etc.
7. Clean the **condenser coil** from the top, by removing fans grid.
8. Clean the surface of **free cooling coils**, if present, uniformaly from top to bottom, by putting the jet in front of the coils with a right angle to the surface (90°).

**Note:** Use of a water stream, such as a garden hose, against a surface loaded coil will drive the fibres and dirt into the coil. This will make cleaning efforts more difficult. Surface loaded fibres must be completely removed prior to using low velocity clean water rinse.

9. Rinse only. **If needed use suggested coil cleaners only (ask Daikin factoy service for more information)** Hose the MCHE off gently preferably from the inside out and top to bottom, running the water through every fin passage until it comes out clean. Microchannels fins are stronger than traditional tube & fin coil fins but still need to be handled with care.
10. It is possible to clean a coil with a high-pressure washer (max 15 barg) only if a flat shape of the water spray is used and direction of the spray is kept perpendicular to the fin edge. **If this direction is not respected the coil may be destroyed** if using a pressure washer so we do not recommend their use.
11. Blow off or vacuum out the residual water from the coil (to speed up drying and prevent pooling).

**Note:** A monthly clean water rinse is recommended for coils that are applied in coastal or industrial environments to help to remove chlorides, dirt and debris. It is very important when rinsing, to water temperature is less than 54 °C. An elevated water temperature will reduce surface tension. Pressure shall not exceed 15 barg.

**Note:** Quarterly cleaning is essential to extend the life of a coil and is required to maintain warranty coverage. Failure to clean a coil will void the warranty and may result in reduced efficiency and durability in the environment.

**WARNING:** Harsh chemicals, household bleach or acid cleaners should not be used to clean coils. These cleaners can be very difficult to rinse out of the coil and can accelerate corrosion. If needed use suggested coil cleaners only (ask Daikin factoy service for more information)

Galvanic corrosion of the connection Copper/Aluminium can occur under the plastic protection; during the maintenance operations or periodic cleaning, check the aspect of the plastic protection of the Copper/Aluminium connection. If it is inflated, damaged, or took off contact the manufacturer representative for advice and information.

In case of free cooling MCH coil failure, stream the section before pressurizing it with nitrogen up to 1-2 barg to remove any trace of humidity.

### 7.2.2 Fins and tubes coil maintenance

The operating environment of the units can affect life of Fins and tubes coils, both of condensing and of free cooling section. In order to mantain the efficiency of the unit over time and its duration, it is necessary to do a frequent cleaning of Fins and tubes coils.
As opposed to fin and tube heat exchangers, Fins and tubes coils are more likely to accumulate dirt on the surface. Dust, pollution, etc...can create obstructions between the fins of the coils. These obstructions can be removed by washing periodically under pressure.

The following maintenance and cleaning procedures are recommended as part of the routine maintenance activities. Before operating:

1. Disconnect the unit from power supply.
2. Wait for the fans to stop completely;
3. Make sure that the fan blades cannot move for any reason (for example: wind).
4. If present, remove the ”V” shaped panels.
5. Remove free cooling coils.
6. Before using a water jet on coils, remove bigger dirt, such as leaves and fibres, with a vacuum cleaner (preferably with a brush or other soft attachment rather than a metal tube), compressed air blown from the inside out (if possible), and/or a soft bristle (not wire!) brush. Do not impact or scrape the coil with the vacuum tube, air nozzle, etc.
7. Clean the **condenser coil** from the top, by removing fans grid.
8. Clean the surface of **free cooling coils**, if present, uniformaly from top to bottom, by putting the jet in front of the coils with a right angle to the surface (90°).

---

**Note:** Use of a water stream, such as a garden hose, against a surface loaded coil will drive the fibres and dirt into the coil. This will make cleaning efforts more difficult. Surface loaded fibres must be completely removed prior to using low velocity clean water rinse.

---

9. Rinse only. If needed use suggested coil cleaners only (ask Daikin factoy service for more information).
10. It is possible to clean a coil with a high-pressure washer (max 7 barg) only if a flat shape of the water spray is used and direction of the spray is kept perpendicular to the fin edge. **If this direction is not respected the coil may be destroyed** if using a pressure washer so we do not recommend their use.

---

**Note:** A monthly clean water rinse is recommended for coils that are applied in coastal or industrial environments to help to remove chlorides, dirt and debris. It is very important when rinsing, to water temperature is less than 54 °C. An elevated water temperature will reduce surface tension. Pressure shall not exceed 7 barg.

---

11. Quarterly cleaning is essential to extend the life of a E-coated coil and is required to maintain warranty coverage. Failure to clean a E-coated coil will void the warranty and may result in reduced efficiency and durability in the environment. For routine quarterly cleaning, first clean the coil with an approved coil cleaner. After cleaning the coils with the approved cleaning agent, use the approved chloride remover to remove soluble salts and revitalize the unit.

**WARNING:** Harsh chemicals, household bleach or acid cleaners should not be used to clean coils. These cleaners can be very difficult to rinse out of the coil and can accelerate corrosion. If needed use suggested coil cleaners only (ask Daikin factoy service for more information)

Galvanic corrosion of the connection Fins and tubes can occur in corrosive atmosphere under the plastic protection; during the maintenance operations or periodic cleaning, check the aspect of the plastic protection of the Fins and tubes connection. If it is inflated, damaged, or took off contact the manufacturer representative for advice and information.

## 7.3 Inverter Capacitors

All units are equipped with an inverter which is directly mounted on board of compressor. Depending on unit model, different inverter sizes are used. VFD models with small size capacitors are called “Capless”.

***Table 18. – Inverter sizes***

| VFD sizes | Type |
|---|---|
| 90 kW | Capless |
| 120 kW | Capless |
| 200 kW | Capless |
| 330 kW | Standard |
| 400 kW | Standard |

**Low Ambient Start-up**

Inverters include a temperature control which allows them to withstand ambient temperatures down to -20°C. However they should not be switched on at temperatures lower than 0°C unless the following procedure is executed:

- Open the switchbox (only trained technicians should perform this operation)
- Open compressor fuses (by pulling the fuse holders) or compressor circuit breakers
- Power on the chiller
- Keep the chiller powered on for 1 hour at least (this allows inverter heaters to warm-up the inverter).
- Close fuse holders
- Close the switchbox

## 8 SERVICE AND LIMITED WARRANTY

All units are factory-tested and guaranteed for 12 months as of the first start-up or 18 months as of delivery.
These units have been developed and constructed according to high quality standards ensuring years of failure-free operation. It is important, however, to ensure proper and periodical maintenance in accordance with all the procedures listed in this manual and with good practice of machines maintenance.
We strongly advise stipulating a maintenance contract with a service authorized by the manufacturer in order to ensure efficient and problem-free service, thanks to the expertise and experience of our personnel.
It must also be taken into consideration that the unit requires maintenance also during the warranty period.
Operatin the unit in an inappropriate manner, beyond its operating limits or not performing proper maintenance according to this manual can void the warranty.
Observe the following points in particular, in order to conform to warranty limits:

1. The unit cannot function beyond the specified limits
2. The electrical power supply must be within the voltage limits and without voltage harmonics or sudden changes.
3. The three-phase power supply must not have un unbalance between phases exceeding 3%. The unit must stay turned off until the electrical problem has been solved.
4. No safety device, either mechanical, electrical or electronic must be disabled or overridden.
5. The water used for filling the water circuit must be clean and suitably treated. A mechanical filter must be installed at the point closest to the evaporator inlet.
6. Unless there is a specific agreement at the time of ordering, the evaporator water flow rate must never be above 120% and below 50% of the nominal flow rate.

## 9 FIRST START-UP CHECKS

***The unit must be started for the first time ONLY by authorized DAIKIN personnel.***

The unit must absolutely not be put into operation, even if for a very short period, without having first meticulously checking the following list in its entirety.

This general commissioning checklist can be used as a guideline and reporting template during the commissioning and hand-over to the user.
For more detailed commissioning instructions, please contact the local Daikin Service department or authorized representative of the manufacturer.

***Table 19 – Checks to be performed before starting the unit***

| **General** | **Yes** | **No** | **N/A** |
|---|---|---|---|
| Check for external damage | ❑ | ❑ | ❑ |
| Open all **isolation and / or shut-off valves** | ❑ | ❑ | ❑ |
| Verify that the unit is pressurized with refrigerant in all of its parts before making the connection to the hydraulic circuit. | ❑ | ❑ | ❑ |
| Check the oil level in the compressors | ❑ | ❑ | ❑ |
| Control wells, thermometers, manometers, controls, etc. installed | ❑ | ❑ | ❑ |
| Availability of at least 25% of the machine load for testing and control settings | ❑ | ❑ | ❑ |
| **Refrigerated water** | **Yes** | **No** | **N/A** |
| Piping completion | ❑ | ❑ | ❑ |
| Install the **water filter** (even when not supplied) at the inlet of the exchangers. | ❑ | ❑ | ❑ |
| Install, calibrate and test (off-on-off switching according to the water flow) the flow switch | ❑ | ❑ | ❑ |
| Water circuit filling, air bleeding | ❑ | ❑ | ❑ |
| Pump installation, (rotation check), filter cleaning | ❑ | ❑ | ❑ |
| Operation of the controls (three-way valve, bypass valve, damper, etc.) | ❑ | ❑ | ❑ |
| Water circuit operation and flow balance | ❑ | ❑ | ❑ |
| Check that all water sensors are correctly fixed in the heat exchange | ❑ | ❑ | ❑ |
| **Electrical circuit** | **Yes** | **No** | **N/A** |
| Power cables connected to the electrical panel | ❑ | ❑ | ❑ |
| Starter and wired interlocking of the pump | ❑ | ❑ | ❑ |
| Electrical connection in compliance with local electrical regulations | ❑ | ❑ | ❑ |
| Install a main switch upstream of the unit, the main fuses and, where required by the national laws of the country of installation, a ground fault detector. | ❑ | ❑ | ❑ |
| Connect the pump contact(s) in series with the contact of the flow switch(es), so that the unit can operate only when the water pumps are running, and the water flow is sufficient. | ❑ | ❑ | ❑ |
| Provide the main voltage and check that it is within ± 10% of the classification given on the nameplate. | ❑ | ❑ | ❑ |

**Note**

**This list must be completed and sent to the local Daikin Service office at least two weeks before the start date.**

## 10 IMPORTANT INFORMATION ABOUT THE REFRIGERANT USED

This product contains fluorinated greenhouse gases. Do not vent gases into the atmosphere.

| | |
|---|---|
| Refrigerant type: | R134a / R1234ze |
| GWP(1) value: | 1430 / 1,4 |
| (1)GWP = | Global Warming Potential |

The refrigerant quantity necessary for standard operation is indicated on the unit name plate.
Periodic inspections for refrigerant leaks may be required depending on European or local legislation. Please contact your local dealer for more information.

### 10.1 Factory and Field charged units instructions

The refrigerant system will be charged with fluorinated greenhouse gases, and the factory charge(s) are recordered on the label, shown below, which is adhered inside the electrical panel.

**1** Fill in with indelible ink the refrigerant charge label supplied with the product as following instructions:
- Any refrigerant charge for each circuit (1; 2; 3) added during commissioning
- the total refrigerant charge (1 + 2 + 3)
- **calculate the greenhouse gas emission with the following formula**:

$$GWP * total\ charge\ [kg]/1000$$

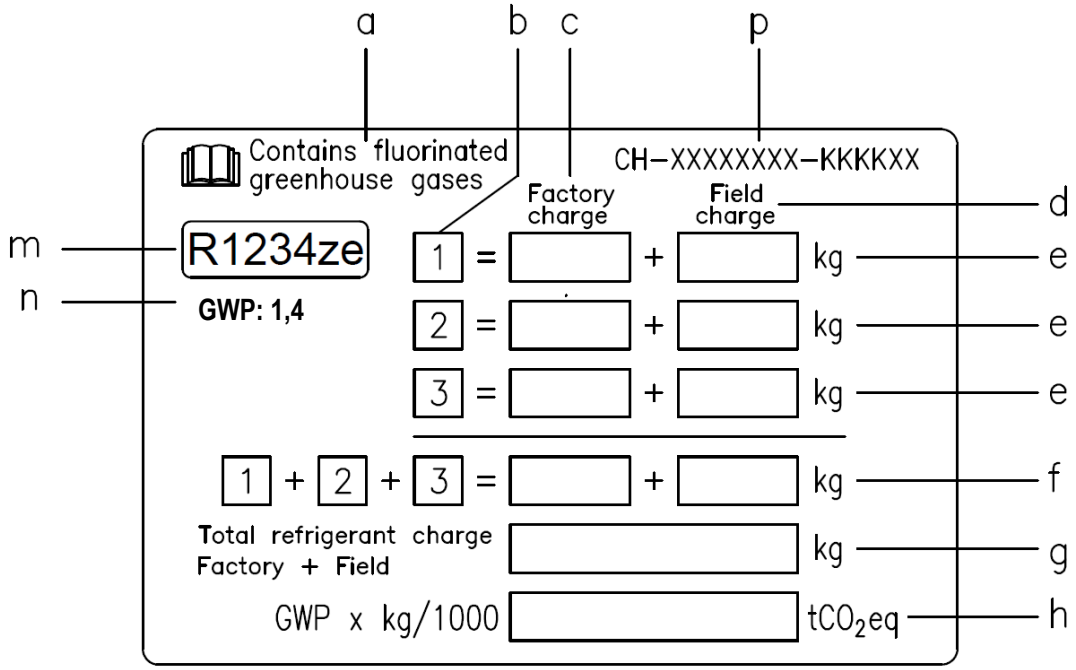


***Fig. 20– Refrigerant charge label***

a. Contains fluorinated greenhouse gases
b. Circuit number
c. Factory charge
d. Field charge
e. Refrigerant charge for each circuit (according to the number of circuits)
f. Total refrigerant charge
g. Total refrigerant charge (Factory + Field)
h. **Greenhouse gas emission** of the total refrigerant charge expressed as tonnes of CO2 equivalent
m. Refrigerant type
n GWP = Global Warming Potential
p. Unit serial number

***In Europe, the greenhouse gas emission of the total refrigerant charge in the system (expressed as tonnes CO2 equivalent) is used to determine the maintenance intervals. Follow the applicable legislation.***

## 11 DISMISSION AND DISPOSAL

The unit is made of metal, plastic and electronic parts. All of these components must be disposed of in accordance with local disposal laws and if in scope with the national laws implementing the Directive 2012/19/EU (RAEE).
Lead batteries must be collected and sent to specific waste collection centers.
Avoid the escape of refrigerant gases into the environment by using suitable pressure vessels and tools for transferring the fluids under pressure. This operation must be carried out by competent personnel in refrigeration systems and in compliance with the laws in force in the country of installation.

## 12 DURATION

After this period the manufacturer advises to carry out a total control of the whole and above all the integrity check of the pressurized refrigeration circuits, as required by the laws in force in some European Community countries.

*The present publication is drawn up by of information only and does not constitute an offer binding upon Daikin Applied Europe S.p.A.. Daikin Applied Europe S.p.A. has compiled the content of this publication to the best of its knowledge. No express or implied warranty is given for the completeness, accuracy, reliability or fitness for particular purpose of its content, and the products and services presented therein. Specification are subject to change without prior notice. Refer to the data communicated at the time of the order. Daikin Applied Europe S.p.A. explicitly rejects any liability for any direct or indirect damage, in the broadest sense, arising from or related to the use and/or interpretation of this publication. All content is copyrighted by Daikin Applied Europe S.p.A..*

**DAIKIN APPLIED EUROPE S.p.A.**
Via Piani di Santa Maria, 72 - 00072 Ariccia (Roma) - Italy
Tel: (+39) 06 93 73 11 - Fax: (+39) 06 93 74 014
http://www.daikinapplied.eu